DATALOGIC™

DATALOGIC AUTOMATION

PROXIMITY SWITCHES

GENERAL CATALOGUE

INDUCTIVE SENSORS
CAPACITIVE SENSORS
MAGNETIC SENSORS

DATALOGIC AUTOMATION FOR INDUSTRIAL AUTOMATION

Datalogic Automation is one of the worldwide leading producers of automatic identification, detection and marking solutions for industrial automation. The ideal partner for companies that aim at developing a real competitive advantage through product traceability and automation of manufacturing processes in industrial and logistics fields.
The five Product Groups:

- IDENTIFICATION (BAR CODE & RFID)
- SENSORS
- SAFETY & MEASUREMENT
- VISION
- LASER MARKING

that today form Datalogic Automation, guarantee product focalization aimed at satisfying specific customer applications as well as offering a very wide and complete product range for industrial Automation, particularly in the following sectors:

- AUTOMOTIVE
- HEALTHCARE - PHARMACEUTICAL
- FOOD - BEVERAGE - TOBACCO
- ELECTRONICS & SOLAR
- GENERAL MANUFACTURING
- TRANSPORTATION & LOGISTICS

Identification Product Group

The automatic identification products have been developed in order to supply compact and extremely functional solutions. Datalogic Automation offers all the technologies available today: state-of –the-art laser scanners and imagers for bar code reading (traditional and 2D) together with RFID systems.

Sensor Product Group

Datalogic Automation is specialized in the development and manufacturing of photoelectric, luminescence and contrast sensors, slot sensors for label detection, fiber optic amplifiers, area sensors, inductive, capacitive and magnetic sensors and temperature controllers.

Safety & Measurement Product Group

Datalogic Automation offers a complete range of safety light curtains. Extremely reliable and flexible, these light curtains protect operators that pass, stay near or operate directly with dangerous automatic machines. Datalogic Automation also supplies a wide range of measurement sensors, commonly used in level and position control, as well as in the precise and accurate detection of the material dimensions during working.

Vision Product Group

The Vision Product Group includes vision sensors for inspection and 2D readers for identification based on the state-of-the-art technology, that however remain easy to use:

Laser Marking Product Group

Datalogic Automation supplies a wide array of solutions able to suit all marking needs: CO2, Fiber and DPSS laser technology. The DPSS technology is available in two different versions (infra-red laser), with harmonic duplication (green laser) and harmonic triplication (UV laser). The complete range of technologies available satisfy all laser marking applications on a wide spectrum of materials: metal alloys – such as steel, titanium and aluminum – plastic materials, as well as organic materials such as paper, cardboard or fabric, leather, wood, glass, silicon and rare earth elements.

PROXIMITY SWITCHES Page

Selection table 14

Inductive sensors

M4 series 27
M5 series 31
M 6.5 series 35
M8 series 43
M12 series 51
M18 series 67
M30 series 83
SQUARE series 97

Capacitive sensors

M18 series 105
M30 series 109

Magnetic sensors

HALL EFFECT series 115
REED CONTACT series 121

Accessories
Connectors - CS Series 129

Cross-reference table 134

TIGHTENING TORQUE

METAL HOUSING	
DIAMETER	**MAX TIGHTENING TORQUE [NM]**
Ø 5	1,5
Ø 8	4
Ø 12	10
Ø 18	30
Ø 30	60

METAL HOUSING	
All the dimension	1,5

RELEVANT STANDARDS FOR OUR SENSOR

These standards are used according to the typology of product		
Proximity switches	Low-voltage equipment	EN 60947-5-2
Electromagnetic compatibility	Industrial, scientific and medical (ISM) radio-frequency equipment Electromagnetic disturbance characteristics	EN 55011
	Static discharge immunity (ESD)	EN 61000-4-2
	Radio frequency immunity	EN 61000-4-3
	Immunity to fast transient	EN 61000-4-4
Protection degree	IPxx	EN 60529
Namur	Proximity switches and switching amplifiers (NAMUR)	EN 60947-5-6
Safety	Safety devices for power operated doors and gates	EN 12978
	Definition of safety categories	EN 954-1
Lift	Safety rules for the construction and installation of lifts	EN 81-70

ELECTRICAL PARAMETERS

NOMINAL VOLTAGE
Is indicates the maximum and minimum voltage values within which sensors work correctly.

RESIDUAL RIPPLE
Maximum admissible ripple of the DC supply voltage shown as percentage to its medium value.

MAXIMUM OUTPUT CURRENT
It shows maximum output current a sensor can cope with when working steadly.

MAXIMUM LEAKAGE CURRENT
Existing load current when output stage is stopped and supply voltage is at maximum nominal value.

ABSORPTION
This in the consumption of the photocell referred to the maximum limits of the nominal voltage and without load.

VOLTAGE DROP
Voltage drop on switching circuit when output transistor is conducting.

SHORT CIRCUIT PROTECTION
A protection in case of short circuits or overload to avoid inner circuit damage. Once the short circuit is eliminated the photocell resets.

PROTECTION AGAINST INVERSION OF POLARITY
Available in DC supplied type, it prevents the sensor from being damage when supply cables are incorrectly connected.

INDUCTIVE LOAD PROTECTION
It protects sensor output in presence of high inductive loads. This protection is performed by a diode or zenner diode.

PROTECTION DEGREE
It shows degree of protection of housing conform to EN60529 regulation.

START UP DELAY
Time interval between sensor supply connection and active output. This time interval is to avoid the switch output beinginan undefined state when the system is switched on.

RATED VOLTAGE
It indicates the power supply where the sensor works perfectly.

MAXIMUM PEAK CURRENT
The maximum current the sensor can sustain in a limited period of time.

WORKING PRINCIPLES

Inductive sensors
Voltage to the device creates an alternate inductive field through an oscillator coil before its active surface. If a metallic object (iron, alluminium, cooper, brass etc.) enters this field, it damps the oscillator and reverses the trigger threshold and causes a change in the output stage state.

Capacitive sensors
Capacitive sensors contain an oscillator by transistor in the frontal section. The oscillating circuit R - C (Resistor - Capacitor) is influenced by variations in capacity, infact when any material, solid or liquid (water, wood, metal, caffee, ponders, etc) comes into contact with the active surface of the sensor the capacitance increases putting into action the oscillator up until the threshold of trigger inverts. By introducing a change in the condition of the final stage and therefore in the command of the external load a potentiometer makes fine adjustment to switching distance.

Nominal switching distance (Sn) According to EN 60947-5-2
It is the conventional distance at which the proximity switches when approching standard targets with axial movement. Such target (conform to the EN 60947-5-2 regulation) shoud be of steel Fe37, square and 1mm thick. Targets should be the same as the sensor diameter.

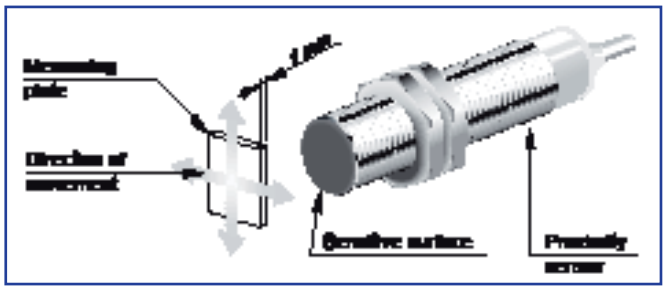

Usable operating distance (Su) According to EN 60947-5-2
It is the assured operating distance within the specified voltage, functionning and temperature intervals it is included between 81% and 121% of the nominal switching distance Sn (0,81Sn <_ Su <_ 1,21Sn) for inductive sensors, and between 72% and 132% of the nominal switching distance (0,72Sn <_ Su <_ 1,32Sn) for capacitive sensors.

Assured operating distance (Sa) According to EN 60947-5-2
It is the distance at which the proximity sensor works safely in all the temperature and voltage intervals as specified for the same sensor. The assured operating distance is included between Ø and 81% of Sn (Ø <_ Sa <_ 0,81Sn) for inductive sensors, and Ø and 72% of Sn (Ø <_ Sa <_ 0,72Sn) for capacitive sensors.

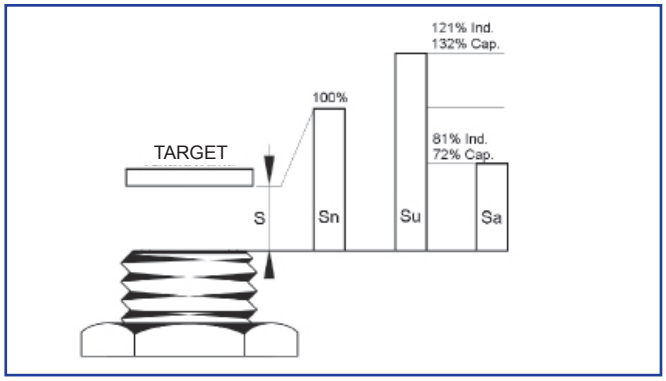

Reducing factors
When the element to be detected is different from Fe37, reduction factors are approximately:

INDUCTIVE SENSORS	
Fe37	1 x Sn*
Stainless-steel	0,9 x Sn
Brass-Bronze	0,5 x Sn
Alluminium	0,4 x Sn
Copper	0,3 x Sn

CAPACITIVE SENSORS	
Metal	1 x Sn*
Water	1 x Sn
P.V.C.	0,5 x Sn
Glass	0,5 x Sn
Wood	0,4 x Sn

*Sn = Nominal switching distance

Hysteresis (H)
It is the distance between the point of switching on and the point of switching off of the trigger object. The value is a percentage of the nominal switching distance Sn.

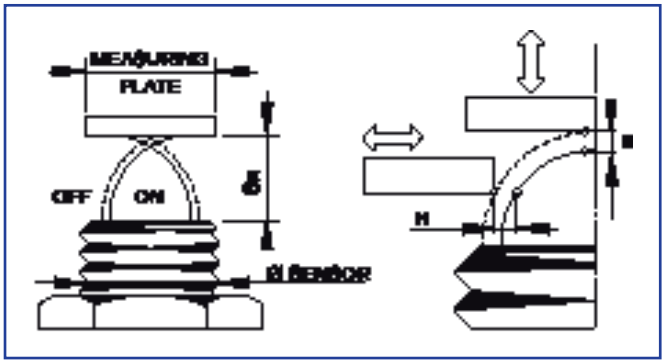

Repeatability (R) According to EN 60947-5-2
It is the precision by which the sensor switching commutation distance is repeated at the maximum supply voltage, at the temperature of 23 °C ± 5 °C with a load current = 100 mA, during a 8 hours period.
The value expresses the percentage of the difference between the maximum and the minimum measure related to the average value of the switching distance Sn.

Switching frequency
It is the maximum possible number of impulse repetition per second. This value is obtained by measurement with a cogged wheel in which cogs are of triggering material. The cogs are as large as the diameter of the sensor and the distance between two cogs is twice the diameter (according to the EN 60947-5-2).

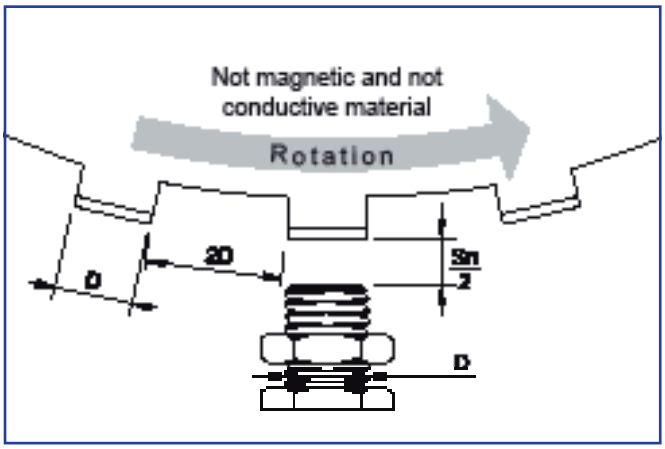

SERIES AND PARALLEL CONNECTIONS FOR NPN O PNP SENSORS

With this kind of connection take into account as follow:
1) voltage drop (C.D.T.) for each sensor (<1,8 V);
2) maximum load current of sensors reffering to self consumption of each sensor (< 10 mA) at output load.

Connection in parallel (OR)
When omitting the diodes shown in the chart, use sensors with output stage, open collector type.

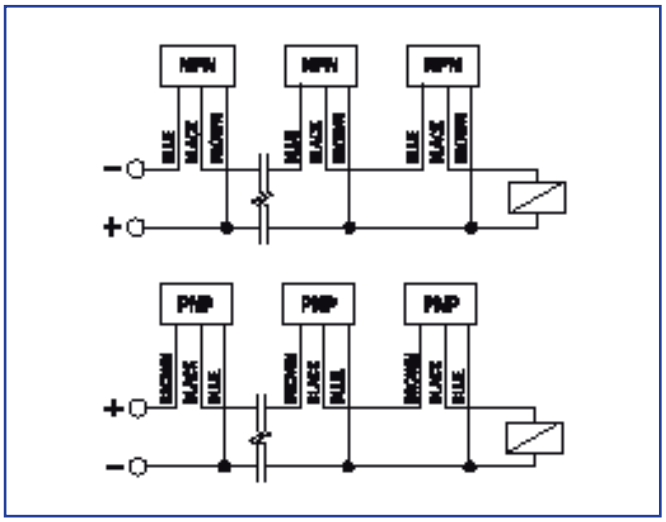

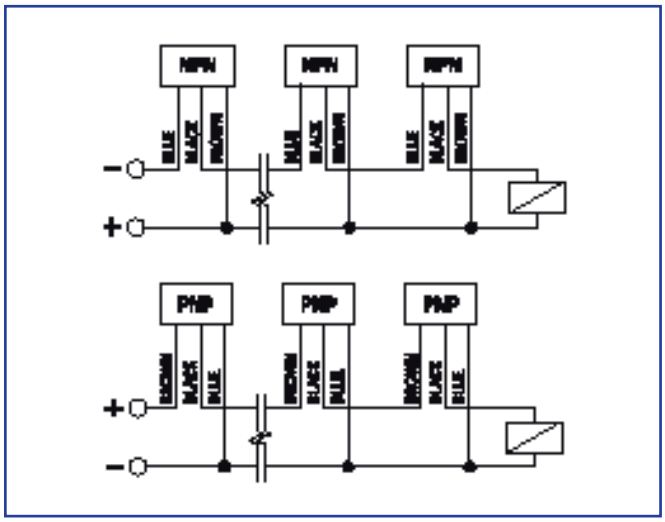

AMPLIFIED SENSORS 10-30 VDC 4 WIRES PROGRAMMABLE OUTPUT

Thanks to the output separated from the rest of circuit, sensors so connected provide important advantages, such as the possibility of 4 output configurations (NPN-NO, NPN-NC, PNP-NO, PNP-NC) on the same model.

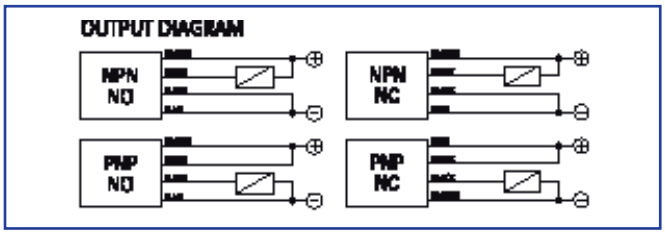

Connection in parallel (OR)
When connected in this way sensors can activate the common output independently, when energized. Thank to the real low leaking current, there is no actual limitation in the number of sensor that can be connected in parallel, providing that the min. current of load energized is mA.

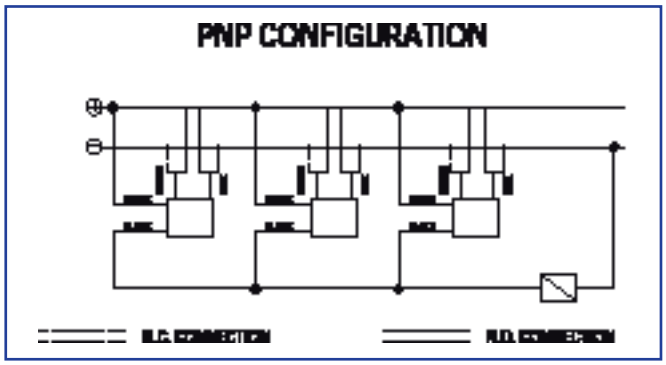

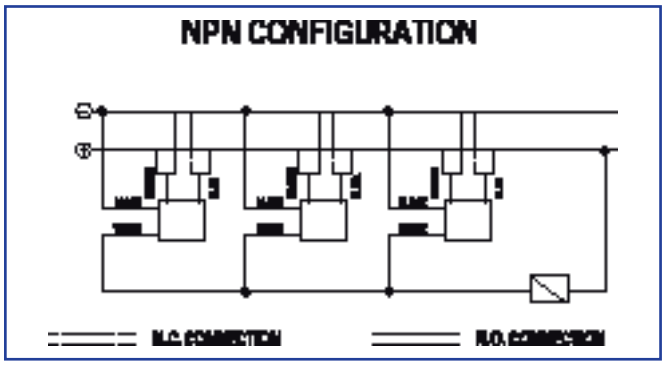

SERIES AND PARALLEL CONNECTIONS FOR AC SENSORS

These connections are not advisable as they may cause anomalities.

NOTICE FOR 24 VAC SUPPLY

In sensor with 24VAC supply it is important to pay attention to the voltage drop (<6 V) at the ends of the sensor and a possible drop in the connection cables between sensor and load.
In order to have a proper voltage on the load, it is advisable to encrease supply voltage by at least 6V.

INSTRUCTIONS FOR CORRECT INSTALLATION

THESE SENSORS ARE NOT MADE FOR SAFETY APPLICATIONS AND FOR SAFETY DEVICES. THEREFORE THEY CANNOT BE USED TO PREVENT INJURIES TO PERSONS, DAMAGES, INDUSTRIAL DAMAGES, ACCIDENT.

Connections

1) Do not exceed the voltage limits printed on the product label. For DC sensors, use stable tension.
2) Do not connect the sensors power supply cables down-stream from other devices and make sure they are directly connected to the mains.
3) If the power supply source is a switching voltage regulator, connect the FG (Frame Ground) terminal to the ground.
4) Connect to the ground the FG (Frame Ground) terminal and all metallic parts of every industrial machinery or not if a sensor is used in it.
5) Do not use the sensors near electromagnetic or high frequency fields.
6) The cables of sensors must be separate from the power supply cables, from the engines cables, from the inverters cables, or from any other electromagnetic device because induction noise could cause malfunction or damage to the inductive sensors. Separate the wires of the sensor from the above indicated lines and then insert the wires into an earthed metal conduit.

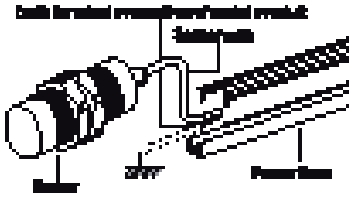

7) After making all operations men-tioned in the above point 6, if inductive interference exists, an adequate transient suppression filter must be used on the power supply line in proximity to the sensor.
8) When a large distance by the connection wires to the sensor has to be covered, use conductors with a cross-section of at least 0.50 mm2 and do not exceed the maximum distance of 100 m.
9) The output signal of a sensor cannot be used during the start up delay (not more than 300 ms).
10) Several sensors should not be connected in series, whereas several sensors can be connected in parallel.

Assembly

1) For correct assembly and alignment, all the accessories supplied with the sensor must be used.
2) To regulate the sensitivity adjustment trimmer use a suitable screw-driver without exerting excessive force.
3) Do not turn too much fixing screws or nuts to avoid electrical or mechanical damages.
4) Mounting sensors side by side, leave an appropriate place between them to avoid mutual interference.
5) Do not pull the connection cable of the sensor. When the conditions of use result to be too hard (in places not protected from shocks or subjected to movements) use a protective sheath.

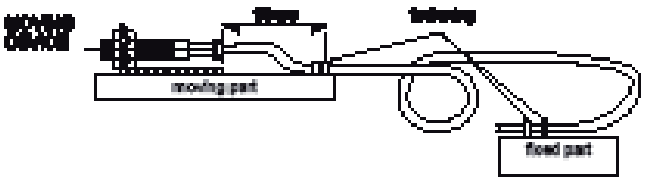

6) Avoid continuous movements between the sensor and its cable and follow the instructions given in the drawing.
7) Protect the sensitive surface of the sensor from shocks, mechanical pressures to avoid irreparable damages.
8) Install the sensor being careful that metallic (or of any other material) shavings shall not settle on the sensitive part of the sensor.
9) Do not use the sensors in presence of organic or liquid solvents or of any kind of acid.
10) Do not use the sensors outdoors without an adequate protection.
11) Do not exceed the indicated temperature limits.
12) Do not subject the appliance to strong vibrations or to shocks which can damage the sensor or can harm its impermeability.
13) Although some ranges of INFRA proximity sensors are protected to IP67, this does not mean that our devices can be used to detect objects in water or in the rain.

Further information

The manufacturer is not liable for the improper use of the product Any use and/or application which are not provided for by the instruction manuals must be previously and directly authorized by the same manufacturer.

FLUSH types

These sensors are not effected by the surrounding metal and therefore the unit can be embedded in it. In order to avoid reciprocal interfe-rance when more sensors are installed side by side, the minimum distance between two sensors must be D/2 (D = sensor diameter).

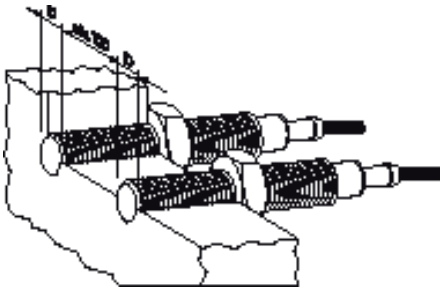

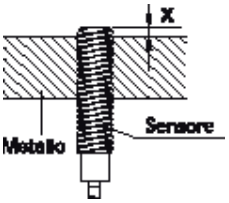

Increased range flush types
For assembly in contact with the metal surface, observe the following values:

Ø	6,5	8	12	18	30
(mm) X	≥1	≥1	≥2	≥3,5	≥5

Not flush types

As these sensors are effected by metal, the area close to the active surface should be free. This area can be of air, non-magnetic or non-conductive material. When sensors are installed side by side, the distance between two sensors should be 2D (D = sensor diameter).

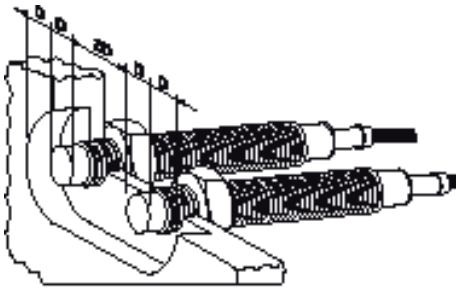

Torque setting for fastening nuts

Avoid over-tightening the fastening nuts in order not to damage the housing and to avoid breaking the internal circuit as a result. Take particular care with the models which have a diameter less than 12 mm.

SENSITIVITY ADJUSTMENT FOR CAPACITIVE SENSORS

Sensitivity adjustment should be carried out when the sensor is installed in a definitive and stable position. Adjustment should be fixed in an intermediate position between minimum and maximum because, since air is a dielectric, a strong variation in humidity could cause inappropriate energising of the sensor (if adjustment is very fine).
The intervention range of the sensor depends on the type of material to be detected and its dimensions (see reduction factor table).
The distance can vary depending on the temperature variation by about ± 10% in a range of -20 to +70°C.
To increase sensitivity, turn the trimmer clockwise, to decrease sensitivity, turn it anti-clockwise.
To gain access to the trimmer, remove the plastic protection screw located at the back of the sensor.

Capacitive sensors

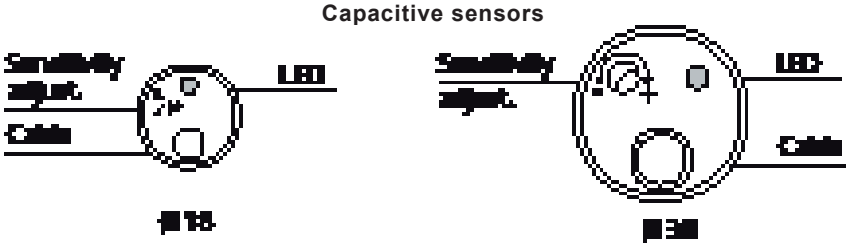

Capacitive sensors with ON/OFF time delay

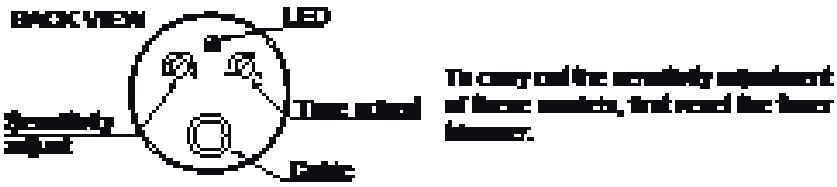

Information
Although some ranges of INFRA photoelectric sensors are protected to IP67, this does not mean that our devices can be used to detect objects in water or in the rain.

POWER SUPPLY FOR SENSORS IN DC CURRENT

A stabilised source of voltage can be obtained using the table indicated beside. Use the following ways to dimension the components:

$$VAC = (V\ RMS\ \text{transformer}) = \frac{(V\ OUT + 4.5) \times 1.1}{1.41}$$

$$C1 = \frac{(0.0053) \times I\ OUT\ \text{(value indicated in mF)}}{2}$$

VL1 = VAC x 1.41 x 1.2
If “ “ is bigger than 10 cm, add C4 beside the stabiliser
C4 = 100 mF ; VL4 = VAC x 1.41 x 1.2
C2 = 220 mF ; VL2 = VOUT x 1.2
C3 = 0,1 mF ; VL3 = 63 V
Note: the regulator must provide adequate power dissipation as:

$$P\ DISS. = \frac{(VAC \times 1.41) - VOUT}{I\ OUT\ max}$$

Where IOUT max. is the maximum available (supplied) current

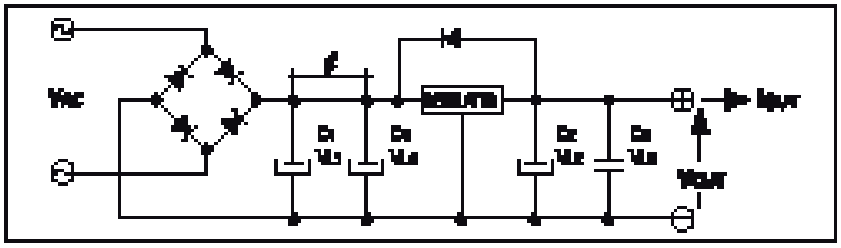

HALL EFFECT AND REED CONTACT MAGNETIC SENSORS

Reed contact magnetic sensors
Proximity magnetic sensors are made of Reed contact whose magnetic material shells, held in a glass bulb containing inert glass, are sensitive to magnetic fields influence which are generated by permanent magnets or by coils supplied with current.
Thanks to the inductive phenomenon, on these same shells magnetic polarities, whose directions are opposite, are generated which cause a change in the contacts status.
Shells contact surfaces are covered with excellent materials (gold, rhodium, tungsten) which enable them to guide, according to the chosen covering, low current circuits or strong inductive loads.
Shells magnetic sensors, in comparison with the traditional contacts provided with mechanical driving gear, have the following advantages:

- hermetic sealing in glass bulb containing inert gas, which protects the contacts against oxidization and against corrosion;
- simplicity in contacts operating by mean of a magnetic field;
- high velocity in functionning and long life contacts (107/108 operations);
- unnecessary maintenance and small overall dimensions.

Switching distance (D)
The switching distance depends on the magnet which is used. Non magnetic and non ferrous materials, placed between the sensor and the magnet, do not interfere with the functionning. If the sensor is installed on ferrous surfaces dispersing the magnetic flux, it is necessary to interpose adequate non-magnetic spacers during the fixing.

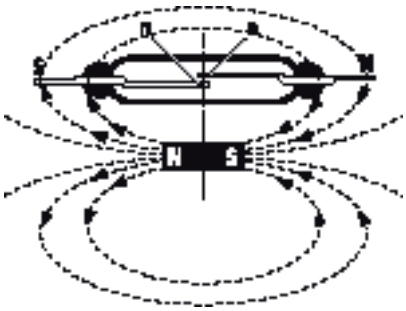

Contacts electric protection
Voltage or current values superior at the specified limits for the contacts cause a decrease of the contacts electric life.
When it is necessary to lead inductive loads, AC electromagnets, incandescent lamps, the peak current at the insertion can be 10+15 times more than the nominal one, while at the interruption a overshoot that could reach the value of thousands of volts.
Therefore in order to protect the contacts it is necessary to use adequate protection electric circuits as specified in the following exemples:

Protection against overshoots in DC

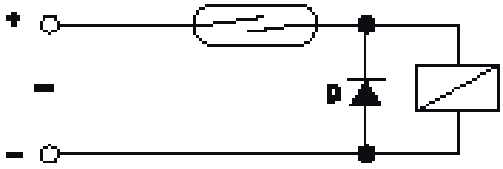

Protection against overshoots in AC-DC

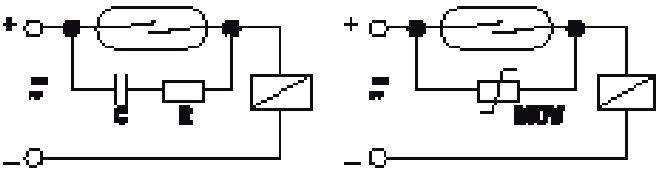

Protection against overloads

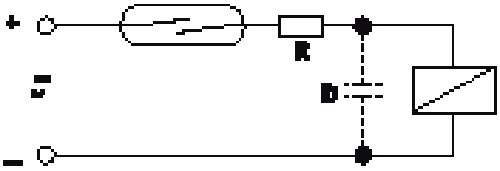

Hall effect magnetic sensors
Hall effect magnetic sensors contain an electric chip which is sensitive to magnetic fields influence generated by permanent magnets or by coils supplied with current.
On the sensitive element a voltage is generated. This voltage is proportional to the magnetic field and it crosses the trigger threshold causing a change in the final stage condition and the consequent control of an external load.

Switching distance (D)
The switching distance depends on the magnet which is used. Non magnetic and non ferrous materials, placed between the sensor and the magnet, do not interfere with the functionning. If the sensor is installed on ferrous surfaces dispersing the magnetic flux, it is necessary to interpose adequate non-magnetic spacers during the fixing.

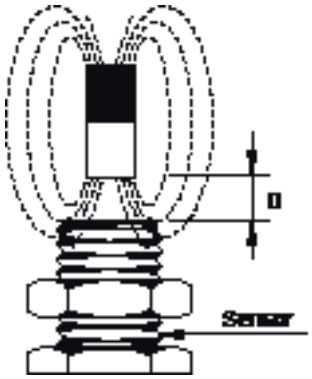

Warning: The activation is obtained when, during the approach, one and only one of the poles is turned to the sensor.

INSTRUCTIONS FOR CORRECT INSTALLATION

THESE SENSORS ARE NOT SAFETY DEVICES, THEREFORE THEY CANNOT BE USED TO PREVENT INJURIES TO PERSONS, DAMAGES, INDUSTRIAL DAMAGES, ACCIDENTS.

Connections

1) Do not exceed the voltage limits printed on the product label. For DC magnetic sensors use stable tension.
2) Do not connect the magnetic sensors power supply cables down-steam from other devices and make sure that they are directly connected to the mains.
3) If the power supply source is a switching voltage regulator, connect the FG (Frame Ground) terminal to the ground.
4) Connect to ground the FG (Frame Ground) terminal and all metallic parts of every industrial machinery or not if a magnetic sensor is used in it.
5) Do not use the magnetic sensors near electromagnetic or high frequency fields.

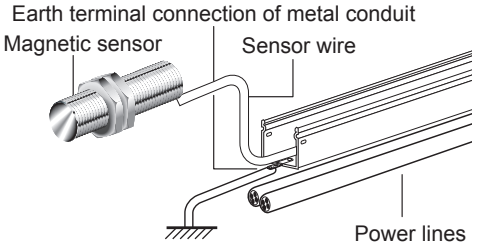

6) The cables of magnetic sensors must be separate from the power supply cables, from the engines cables, from the inverters cables, or from any other electromagnetic device because induction noise could cause malfunction or damage to the magnetic sensors. Separate the wires of the magnetic sensors from the above indicated cables and then insert the wires into an earthed metal conduit.
7) After making all operations mentioned in the above point 6, if inductive interference exists, an adequate transient suppression filter must be used on the power supply line in proximity to the magnetic sensors.
8) When a large distance by the connection wires to the sensor has to be covered, use conductors with a cross-section of a least 0.50 mm2 and do not exceed the maximum distance of 100 m.
9) The output signal of a magnetic sensor cannot be used during the “start up delay stage” (not more than 300 ms).
10) Several sensors should not be connected in series, whereas several sensors can be connected in parallel.

Assembly

1) For correct assembly and alignment, all the accessories supplied with the sensor must be used.
2) Do not turn too much fixing screws or nuts to avoid electrical or mechanical damages.
3) Mounting magnetic sensors side by side, leave an appropriate place between them to avoid mutual interference.
4) Do not pull the connection cable of the sensor. When the conditions of use result to be too hard (in places not protected from shocks or subjected to movements) use a protective sheath.

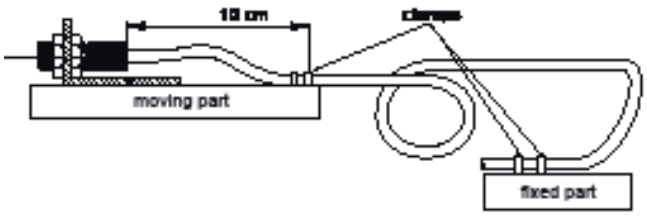

5) Avoid continuous movements between the sensor and its cable and follow the instructions given in the drawing.
6) Protect the sensitive surface of the sensor from shocks, mechanical pressures to avoid irreparable damages.
7) Install the sensor being careful that metallic (or of any other material) shavings shall not settle on the sensitive part of the sensor.
8) Do not use the sensors in presence of organic or liquid solvents or of any kind of acid.
9) Do not use the sensors outdoors without an adequate protection.
10) Do not exceed the indicated temperature limits.
11) Do not subject the appliance to strong vibrations or to shocks which can damage the sensor or can harm its impermeability.

Further information

The manufacturer is not liable for the improper use of the product.
Any use and/or application which are not provided for by the instruction manuals must be previously and directly authorized by the same manufacturer.

Information

Although some ranges of INFRA photoelectric sensors are protected to IP67, this does not mean that our devices can be used to detect objects in water or in the rain.

Activation of hall effect sensors with frontal sensitivity

These sensors are sensitive to magnetic fields of every kind of polarity (for this reason they are defined as OMNIPOLAR) that concern the sensitive frontal part.

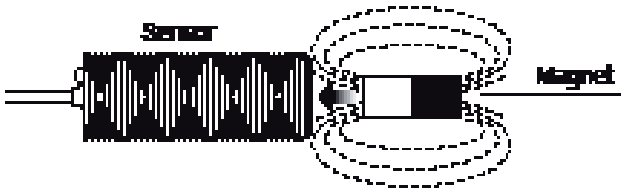

The activation is obtained when, during the approach, one and only one of the poles is turned to the sensor.

Activation of hall effect sensors with bilateral sensitivity

These sensors are sensitive to magnetic fields of every kind of polarity (for this reason they are defined as OMNIPOLAR) that concern each of the two sensitive faces.

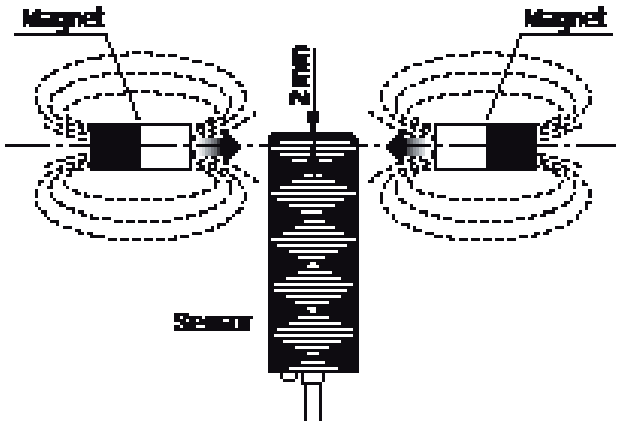

The activation is obtained when, during the approach, one and only one of the poles is turned to the sensor.

SERIES AND PARALLEL CONNECTIONS FOR PNP SENSORS

Series connections (AND)
Sensors which are connected in this way can activate only one output when they are simultaneously excited. In order to realise this kind of connection, for DC models, pay attention to the following notes:
1) the voltage drop of each sensor (< 1,5 V);
2) the maximum load voltage of the sensors that are used related to the consumption of each sensor (< 30 mA).

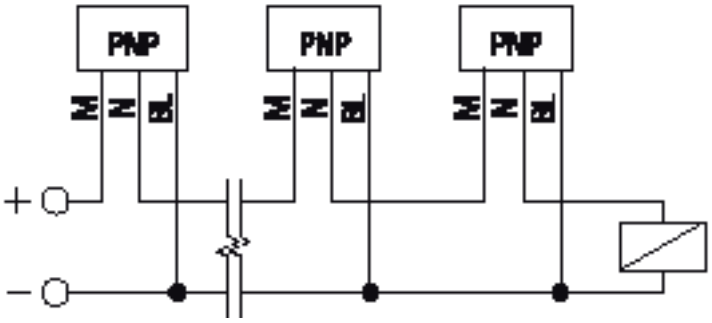

Parallel connection (OR)
Sensors which are connected in this way can activate indipendently the common output when they are excited. If you want to omit the diodes shown in the diagrams, it is necessary to use sensors with open collector (NO) final stage.

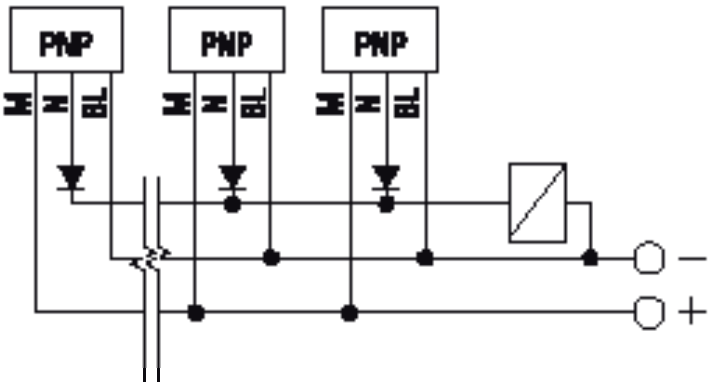

SERIES AND PARALLEL CONNECTIONS FOR PNP SENSORS

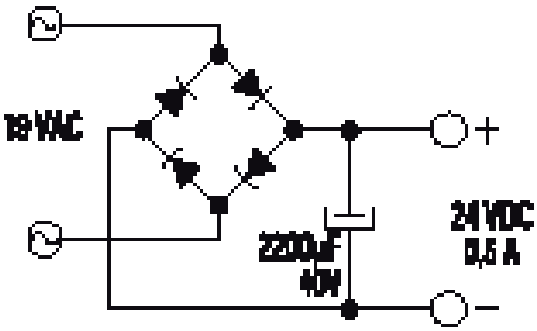

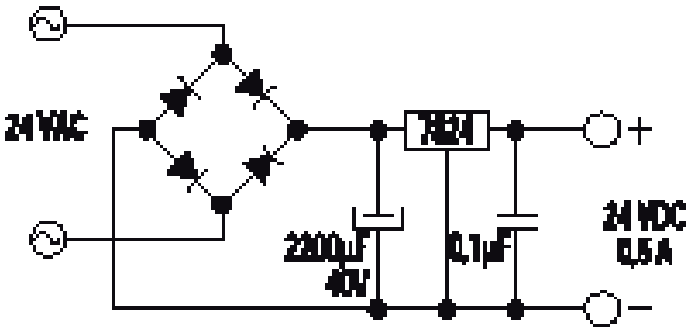

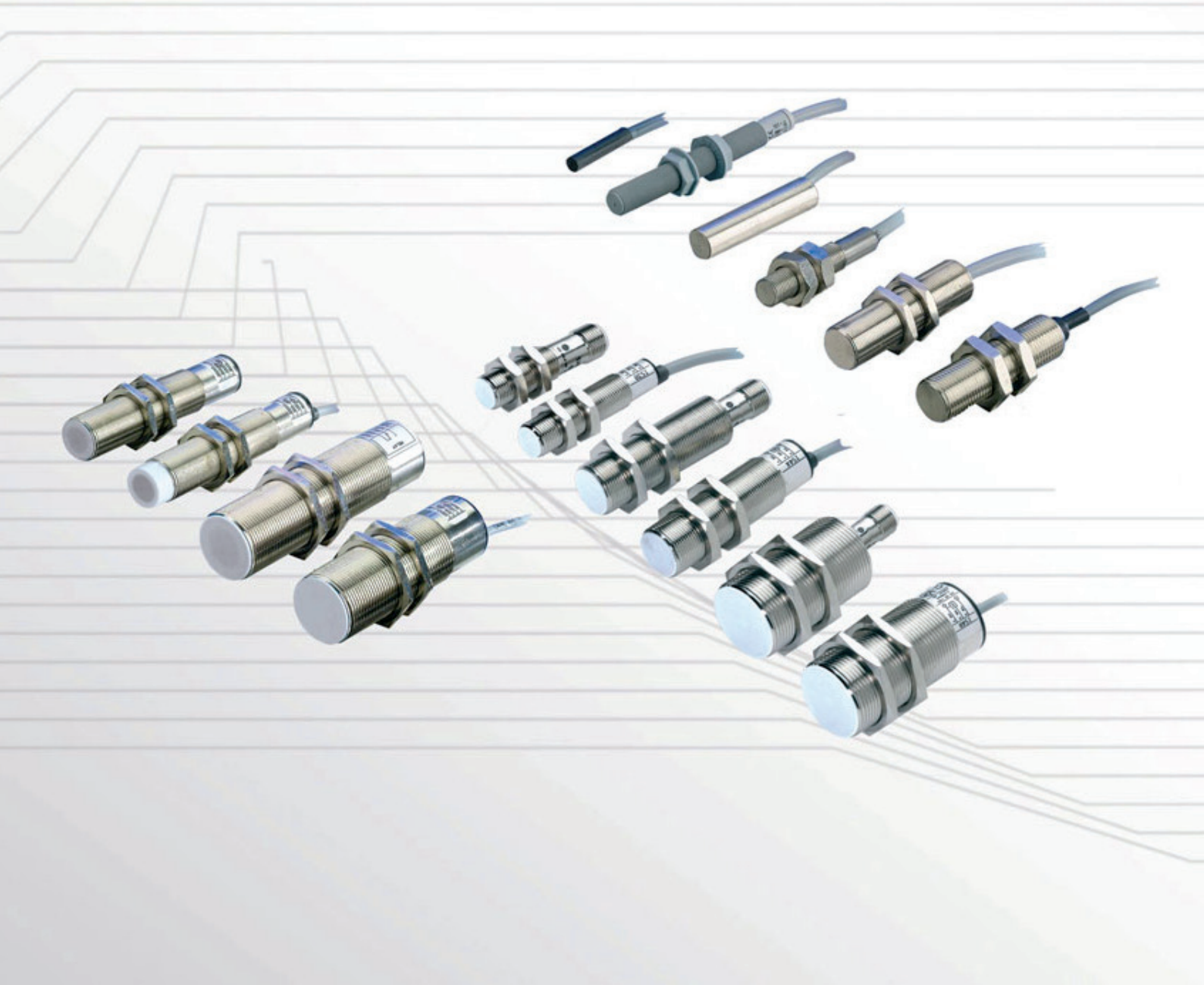

Proximity inductive sensors

SERIES		M4/M5	M6,5/M8
Operating distance		0.8 mm	1,5 mm, flush models 2 mm, non flush models
Repeatibility		≤ 1%	≤ 3%
Hysteresis		< 10%	< 10%
Ripple		≤ 10%	≤ 10%
Switching frequency		2000 Hz	1000 Hz
Indicators		Yellow LED	Yellow LED
TECHNICAL DATA			
Power supply	Vdc	10 ... 30, 3 wires	10 ... 30, 3 wires UL
	Vac		
	Vac/dc		
Output	2 wires NO/NC		
	3 wires NPN/PNP NO/NC	•	•
	4 wires NPN/PNP NO+NC		
	4 wires programmable		
	other		
Connections	cable	•	•
	M8 connector	•	•
	M12 connector		•
Housing		standard	standard short
Housing material		AISI-304 stainless steel	NI plated brass
Mechanical protection		IP67	IP67

Proximity inductive sensors

SERIES		M6,5/M8 2X	M12
Operating distance		2 mm, flush models 3 mm, non flush models	2 mm, flush models 4 mm, non flush models
Repeatability		≤ 3%	≤ 3%
Hysteresis		< 10%	< 10%
Ripple		≤ 10%	≤ 10%
Switching frequency		500 Hz	1000 Hz
Indicators		Yellow LED	Yellow LED
TECHNICAL DATA			
Power supply	Vdc	10 ... 30, 2 wires (UL)	10 ... 30, 2, 3 and 4 wires (UL)
	Vac		20 ... 250, 2 and 3 wires
	Vac/dc		
Output	2 wires NO/NC		•
	3 wires NPN/PNP NO/NC	•	•
	4 wires NPN/PNP NO+NC		•
	4 wires programmable		•
	other		NAMUR
Connections	cable	•	•
	M8 connector	•	
	M12 connector	•	•
Housing		standard short	standard short
Housing material		NI plated brass	NI plated brass AISI-316L stainless steel
Mechanical protection		IP67	IP67

M12 2X	M18	M18 2X
4 mm, flush models 8 mm, non flush models	5 mm, flush models 8 mm, non flush models	8 mm, flush models 14 mm, non flush models
≤ 3%	≤ 3%	≤ 3%
< 10%	< 10%	< 10%
≤ 10%	≤ 10%	≤ 10%
500 Hz	1000 Hz	400 Hz
Yellow LED	Yellow LED	Yellow LED
10 ... 30, 2, 3 and 4 wires (UL)	10 ... 30, 2, 3 and 4 wires (UL) 20 ... 250, 2 and 3 wires	10 ... 30, 2, 3 and 4 wires (UL)
•	•	•
•	•	•
•	•	•
•	•	•
	NAMUR	
•	•	•
•	•	•
•	•	•
standard short	standard short	standard short
NI plated brass AISI-316L stainless steel	NI plated brass AISI-316L stainless steel	NI plated brass AISI-316L stainless steel
IP67	IP67	IP67

Proximity inductive sensors

SERIES		M30	M30 2X
Operating distance		10 mm, flush models 15 mm, non flush models	15 mm, flush models 20 mm, non flush models
Repeatibility		≤ 3%	≤ 3%
Hysteresis		< 10%	< 10%
Ripple		≤ 10%	≤ 10%
Switching frequency		300 Hz	200 Hz
Indicators		Yellow LED	Yellow LED
TECHNICAL DATA			
Power supply	Vdc	10 ... 30, 2,3 and 4 wires (UL)	10 ... 30, 2,3 and 4 wires (UL)
	Vac	20 ... 250, 2 and 3 wires	
	Vac/dc		
Output	2 wires NO/NC	•	•
	3 wires NPN/PNP NO/NC	•	•
	4 wires NPN/PNP NO+NC	•	•
	4 wires programmable	•	•
	other	NAMUR	
Connections	cable	•	•
	M8 connector	•	•
	M12 connector	•	•
Housing		standard short	standard short
Housing material		NI plated brass	NI plated brass
Mechanical protection		IP67	IP67

8x8 mm SQUARE V DC	40 mm SQUARE V DC
1,5 mm	15 mm, flush models 30 mm, non flush models
5 %	< 1 % (Sr)
≤ 15 %	< 15 % (Sr)
≤ 15%	≤ 10%
1.000 Hz	10 ÷ 30 V DC Models : 100 Hz 20÷250 V AC/DC Models:25 Hz AC; 40 Hz DC
Yellow LED	Yellow LED
24, 3 wires (UL)	10 ... 30, 4 wires (UL)
	20 ... 250, 2 wires
	•
	•
•	
•	•
•	
	•
standard	standard short
Gd Zn Al	PBT
IP65	IP67

Proximity capacitive sensors

SERIES		M18 METAL	M18 PLASTIC
Operating distance		1÷5 mm, flush models 1÷10 mm, non flush models	2÷8 mm, flush models 2÷15 mm, non flush models
Repeatability		≤ 5% at even temperature	≤ 5% at even temperature
Hysteresis		Depending on Sensing Distance	Depending on Sensing Distance
Ripple		≤ 10%	≤ 10%
Switching frequency		10 Hz	10 Hz
Indicators		Yellow LED	Yellow LED
TECHNICAL DATA			
Power supply	Vdc	10 ... 30, 4 wires UL	UL
	Vac		20 ... 250, 2 wires
	Vac/dc		
Output	2 wires NO/NC		•
	3 wires NPN/PNP NO/NC		
	4 wires NPN/PNP NO+NC	•	
	4 wires programmable		
	other		
Connections	cable	•	
	M8 connector	•	
	M12 connector		•
Housing		standard	standard
Housing material		NI plated brass	PBT
Mechanical protection		IP67	IP67

M30 V DC	M30 V AC/DC	M30 PLASTIC
1÷15 mm, flush models 1÷25 mm, non flush models	1÷20 mm, flush models 2÷30 mm, non flush models	2÷20 mm, flush models 2÷30 mm, non flush models
≤ 5% at even temperature	≤ 5% at even temperature	≤ 5% at even temperature
Depending on Sensing Distance	Depending on Sensing Distance	Depending on Sensing Distance
≤ 10%	≤ 10%	≤ 15%
10 Hz	10 Hz	25 Hz
Yellow LED	Yellow LED	Yellow LED
10 ... 30, 4 wires (UL)		
	20 ... 230, 2 wires (UL)	20 ... 250, 2 wires (UL)
		•
•		
	Timer relay output	
•	•	
•		
		•
standard	standard	standard
NI plated brass	PBT	NI plated brass AISI-316L stainless steel
IP67	IP65	IP67

Proximity magnetic sensors

SERIES		M6 REED	M8 REED
Operating distance		Up to 32 mm	Up to 32 mm
Repeatibility		± 0.3 mm	± 0.3 mm
Hysteresis		2.5 / 5 mm depending on magnet target	2.5 / 5 mm depending on magnet target
Ripple			
Switching frequency		200 Hz	200 Hz
Indicators			
TECHNICAL DATA			
Power supply	Vdc		
	Vac		
	Vac/dc		
Output	2 wires NO/NC		
	3 wires NPN/PNP NO/NC		
	4 wires NPN/PNP NO+NC		
	4 wires programmable		
	other	•	•
Connections	cable	•	•
	M8 connector		
	M12 connector		
Housing		standard	standard
Housing material		ABS	NI plated brass
Mechanical protection		IP67	IP67

M10 REED	M12 REED	M18 REED
Up to 32 mm	Up to 24 mm	Up to 22 mm
± 0.3 mm	± 0.3 mm	± 0.3 mm
2.5 / 5 mm depending on magnet target	0 ÷ 9 mm depending on magnet target	6 / 7 / 9 mm depending on magnet target
200 Hz	200 Hz	200 Hz
•	•	•
•	•	•
standard	standard short	standard
NI plated brass PBT	NI plated brass PBT	NI plated brass
IP67	IP67	IP67

Proximity magnetic sensors

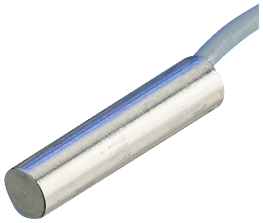

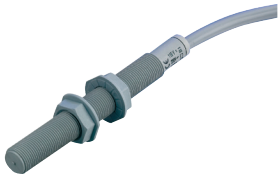

SERIES		M9 HALL EFFECT	M12 HALL EFFECT
Operating distance		Up to 41 mm	Up to 41 mm
Repeatibility			
Hysteresis		Max. Diff. 7 mm (Typ. 4 mm @ 25 °C)	Max. Diff. 7 mm (Typ. 4 mm @ 25 °C)
Ripple		≤ 10%	≤ 10%
Switching frequency		10 KHz	10 KHz
Indicators		Yellow LED Green LED	Yellow LED Green LED
TECHNICAL DATA			
Power supply	Vdc	12 ... 30 V DC, 3 wires UL	12 ... 30 V DC, 3 wires UL
	Vac		
	Vac/dc		
Output	2 wires NO/NC		
	3 wires NPN/PNP NO/NC	•	•
	4 wires NPN/PNP NO+NC		
	4 wires programmable		
	other		
Connections	cable	•	•
	M8 connector		
	M12 connector		
Housing		standard	standard
Housing material		NI plated brass	NI plated brass
Mechanical protection		IP67	IP67

M18 HALL EFFECT
Up to 41 mm
Max. Diff. 7 mm (Typ. 4 mm @ 25 °C)
≤ 10%
10 KHz
Yellow LED Green LED
12 ... 30 V DC, 3 wires UL
•
•
standard
NI plated brass
IP67

INDUCTIVE SENSORS

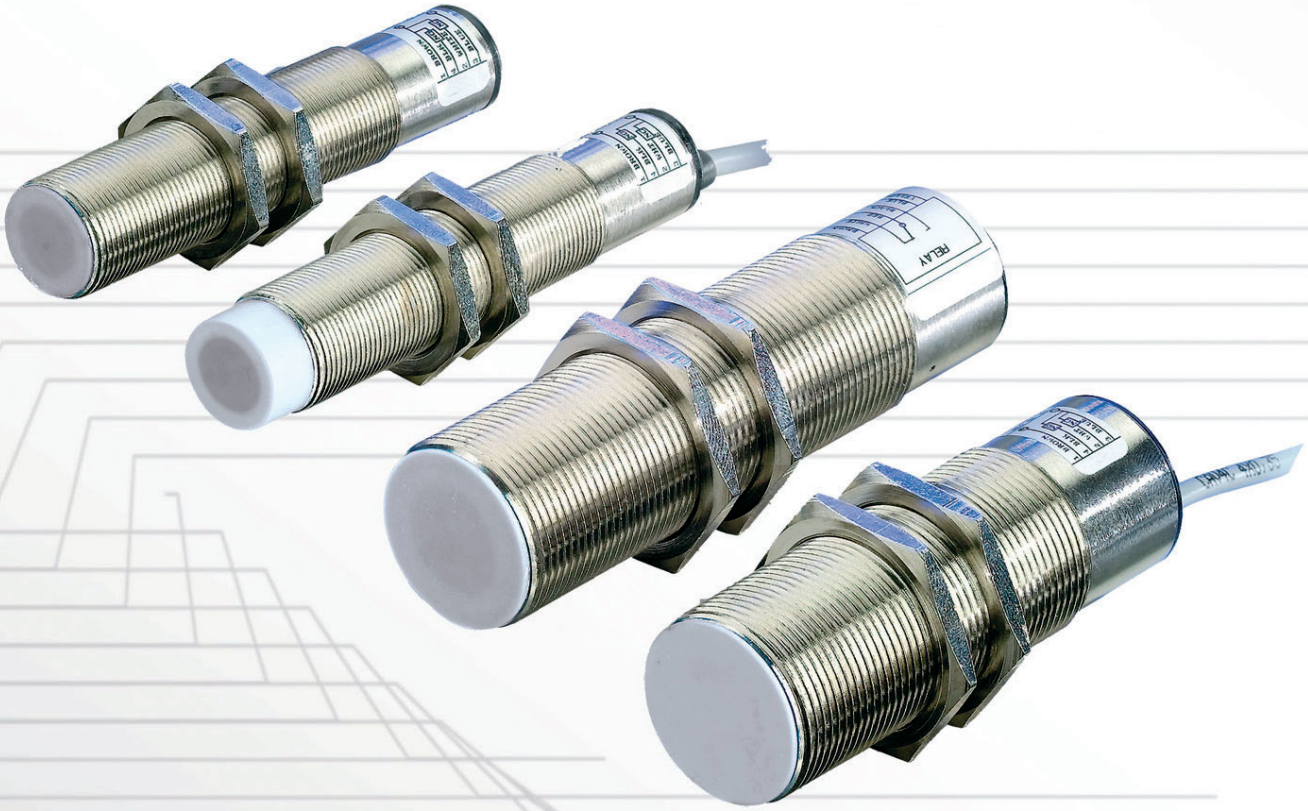

M4 SERIES

There are millions of inductive sensors deployed in almost every area of factory automation. They detect metal objects contactless and are distinguished by a long operating life and extreme robustness. The Datalogic Automation inductive family provides the right solution to market requirements, offering a wide range of cylindrical and rectangular standard sensors with one or two set switching distances, available also with two, three or four wires connection models, short and standard housing and cable or connector version. Stainless steel version for both harsh environments for FOOD applications.

HIGHLIGHTS

- Wide range: suitable practically for all the industrial applications
- Stainless steel versions: suitable for food applications
- 1X and 2 X operating distances: high detection reliability and precise reading
- 2, 3 or 4 wire connection: flexible connection system to meet customer applications

APPLICATIONS

Automatic warehouse

Automotive

Trasportation lines

Packaging lines

10÷30 V DC - 3 WIRES NPN OR PNP OUTPUT

- Range, 0,8mm - flush
- NO output

WIRING DIAGRAMS

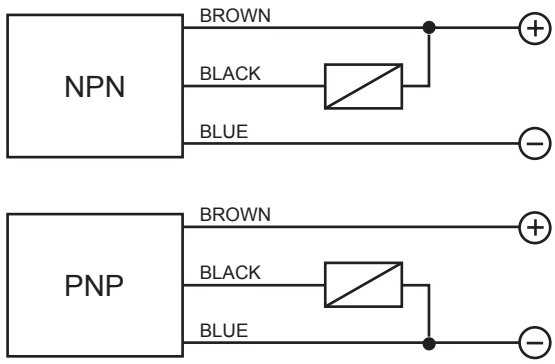

TECHNICAL DATA

	FLUSH
NOMINAL SWITCHING DISTANCE (Sn)	0,8 mm
NOMINAL VOLTAGE	10 ÷ 30 VDC (-15 / +10%)
RESIDUAL RIPPLE	≤ 10%
HYSTERESIS	< 10%
MAX. OUTPUT CURRENT	100 mA
RESIDUAL CURRENT	≤ 10 mA
VOLTAGE DROP (Sensor ON)	< 1 V (I = 100 mA)
OPERATION LED	Present
SWITCHING FREQUENCY	2000 Hz
START UP DELAY	≤ 50 ms
REPEATABILITY	≤ 1%
SHORT CIRCUIT PROTECTION	Present (self-resetting)
ELECTRIC PROTECTIONS	Against polarity reversal inductive loads
TEMPERATURE LIMITS	- 25 ÷ +60 °C
PROTECTION DEGREE	IP 67
CABLE LENGTH	2 m
CABLE SECTION	3 x 0.14 mm²
HOUSING MATERIAL	Stainless-steel
WEIGHT - Cable output -	50 g

CE c UL US LISTED

DIMENSIONS (mm)

CONFIGURATION WITH CABLE

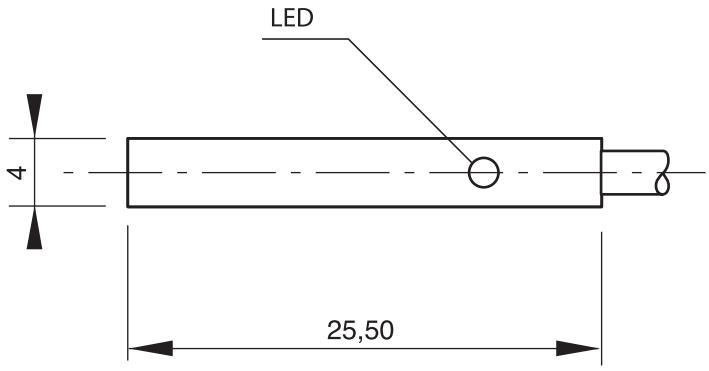

MODEL SELECTION AND ORDER INFORMATION

2MT CABLE

CODE	MODEL	RANGE	HOUSING	STEEL AISI304	FLUSH	WIRES	NPN/PNP	NO/NC
95B061001	IS-04-A3-03	1X	STANDARD	•	•	3	NPN	NO
95B061011	IS-04-A1-03	1X	STANDARD	•	•	3	PNP	NO

MODEL DESCRIPTION

IS - 04 - A 1 - 03

DIAMETER
04 = 4mm
05 = 5mm
65 = 6,5mm
08 = 8mm
12 = 12mm
18 = 18mm
30 = 30mm
40 = 40x40mm SQUARE
80 = 80x80mm SQUARE
88 = 8x8mm SQUARE

CONSTRUCTION
A= flush standard housing
B= flush short housing
BB= flush extra short housing
C= non flush standard housing
D= non flush short housing
E= flush standard housing double range
F= non flush standard housing double range
G= flush short housing double range
GG= flush extra short housing double range
H= non flush short housing double range
I= flush standard housing metal face
L= non flush standard housing metal face
M= flush short housing steel
N= non flush short housing steel
O= flush short housing steel double range
P= non flush short housing steel double range
Q= flush 8x8mm square housing
R= flush 8x8mm square housing double range
S= flush standard housing steel
T= non flush standard housing steel
U= flush standard housing steel double range
V= non flush standard housing steel double range
W= flush 40x40mm square housing
X= flush 40x40mm short square housing
Y= non flush 40x40mm square housing
Z= non flush 40x40mm short square housing

OUTPUT
1 = 10-30 Vdc PNP NO
2 = 10-30 Vdc PNP NC
3 = 10-30 Vdc NPN NO
4 = 10-30 Vdc NPN NC
5 = 10-30 Vdc PNP NO-NC
6 = 10-30 Vdc NPN NO-NC
7 = 24-230Vac – 2 wires NO
8 = 24-230Vac – 2 wires NC
9 = 10-30 Vdc - 2 wires NO-NC
0 = 10-30 Vdc - 4 wires
11 = Analog 4-20mA
12 = Analog 0-10V
13 = Analog 0-10V/4-20mA
14 = Analog 0-5V/1-5mA
15 = 20-250Vac/Vdc-2 and 3 wires NO
20 = NAMUR

CONNECTION
02 = Cable 500mm
03 = Cable 2mt
04 = Cable 700mm
S1 = M8 connector
S2 = M12 connector
S3 = terminal block*
S4 = unf 1/2”

* only for square housing version

Note: Not all code combinations are available. Please refer to alphabetical model index for the list of available models.

The company endeavours to continuously improve and renew its products; for this reason the technical data and contents of this catalogue may undergo variations without prior notice. For correct installation and use, the company can guarantee only the data indicated in the instruction manual supplied with the products.

M5 SERIES

There are millions of inductive sensors deployed in almost every area of factory automation. They detect metal objects contactless and are distinguished by a long operating life and extreme robustness. The Datalogic Automation inductive family provides the right solution to market requirements, offering a wide range of cylindrical and rectangular standard sensors with one or two set switching distances, available also with two, three or four wires connection models, short and standard housing and cable or connector version. Stainless steel version for both harsh environments or for FOOD applications.

HIGHLIGHTS

- Wide range: suitable practically for all the industrial applications
- Stainless steel versions: suitable for food applications
- 1X and 2 X operating distances: high detection reliability and precise reading
- 2, 3 or 4 wire connection: flexible connection system to meet customer applications

APPLICATIONS

Automatic warehouse

Automotive

Trasportation lines

Packaging lines

10÷30 V DC - 3 WIRES NPN OR PNP OUTPUT

- Range, 0,8mm - flush
- NO output
- Cable or M8 quick connect models

WIRING DIAGRAMS

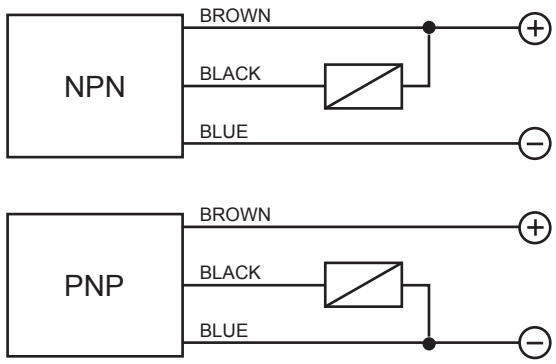

TECHNICAL DATA

	FLUSH
NOMINAL SWITCHING DISTANCE (Sn)	0,8 mm
NOMINAL VOLTAGE	10 ÷ 30 VDC (-15 / +10%)
RESIDUAL RIPPLE	≤ 10%
HYSTERESIS	< 10%
MAX. OUTPUT CURRENT	100 mA
RESIDUAL CURRENT	≤ 10 mA
VOLTAGE DROP (Sensor ON)	< 1 V (I = 100 mA)
OPERATION LED	Present
SWITCHING FREQUENCY	2000 Hz
START UP DELAY	≤ 50 ms
REPEATABILITY	≤ 1%
SHORT CIRCUIT PROTECTION	Present (self-resetting)
ELECTRIC PROTECTIONS	Against polarity reversal inductive loads
TEMPERATURE LIMITS	- 25 ÷ +60 °C
PROTECTION DEGREE	IP 67
CABLE LENGTH	2 m
CABLE SECTION	3 x 0.14 mm²
HOUSING MATERIAL	Stainless-steel
WEIGHT - Cable output -	50 g
WEIGHT - M8 connector output -	40 g

CONNECTION WITH CONNECTOR M8

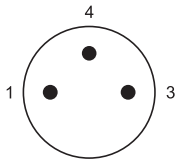

View of triple male connector

CONTACTS CONFIGURATION

Available	Contacts numbers		
	1 BROWN	3 BLUE	4 BLACK
NPN/PNP	+	–	NO/NC

DIMENSIONS (mm)

CONFIGURATION WITH CABLE

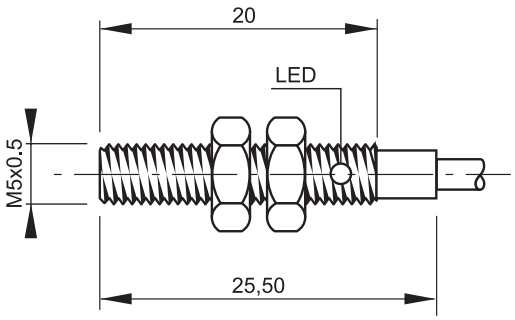

CONFIGURATION WITH CONNECTOR M8

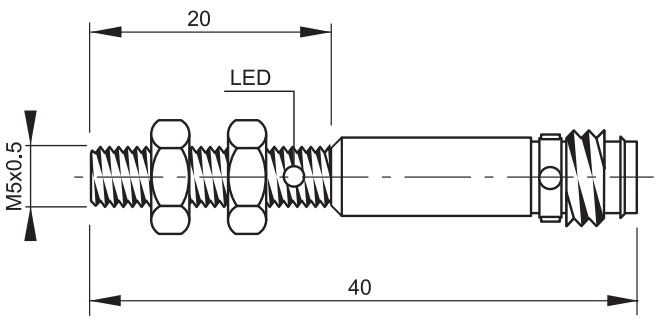

MODEL SELECTION AND ORDER INFORMATION

2MT CABLE

CODE	MODEL	RANGE	HOUSING	STEEL AISI304	FLUSH	WIRES	NPN/PNP	NO/NC
95B061021	IS-05-A3-03	1X	STANDARD		•	3	NPN	NO
95B061041	IS-05-A1-03	1X	STANDARD		•	3	PNP	NO

M8 CONNECTOR

CODE	MODEL	RANGE	HOUSING	STEEL AISI304	FLUSH	WIRES	NPN/PNP	NO/NC
95B061031	IS-05-A3-S1	1X	STANDARD		•	3	NPN	NO
95B061051	IS-05-A1-S1	1X	STANDARD		•	3	PNP	NO

MODEL DESCRIPTION

IS - 04 - A 1 - 03

DIAMETER
04 = 4mm
05 = 5mm
65 = 6,5mm
08 = 8mm
12 = 12mm
18 = 18mm
30 = 30mm
40 = 40x40mm SQUARE
80 = 80x80mm SQUARE
88 = 8x8mm SQUARE

CONSTRUCTION
A= flush standard housing
B= flush short housing
BB= flush extra short housing
C= non flush standard housing
D= non flush short housing
E= flush standard housing double range
F= non flush standard housing double range
G= flush short housing double range
GG= flush extra short housing double range
H= non flush short housing double range
I= flush standard housing metal face
L= non flush standard housing metal face
M= flush short housing steel
N= non flush short housing steel
O= flush short housing steel double range
P= non flush short housing steel double range
Q= flush 8x8mm square housing
R= flush 8x8mm square housing double range
S= flush standard housing steel
T= non flush standard housing steel
U= flush standard housing steel double range
V= non flush standard housing steel double range
W= flush 40x40mm square housing
X= flush 40x40mm short square housing
Y= non flush 40x40mm square housing
Z= non flush 40x40mm short square housing

OUTPUT
1 = 10-30 Vdc PNP NO
2 = 10-30 Vdc PNP NC
3 = 10-30 Vdc NPN NO
4 = 10-30 Vdc NPN NC
5 = 10-30 Vdc PNP NO-NC
6 = 10-30 Vdc NPN NO-NC
7 = 24-230Vac – 2 wires NO
8 = 24-230Vac – 2 wires NC
9 = 10-30 Vdc - 2 wires NO-NC
0 = 10-30 Vdc - 4 wires
11 = Analog 4-20mA
12 = Analog 0-10V
13 = Analog 0-10V/4-20mA
14 = Analog 0-5V/1-5mA
15 = 20-250Vac/Vdc-2 and 3 wires NO
20 = NAMUR

CONNECTION
02 = Cable 500mm
03 = Cable 2mt
04 = Cable 700mm
S1 = M8 connector
S2 = M12 connector
S3 = terminal block*
S4 = unf 1/2”

*
only for square housing version

Note: Not all code combinations are available. Please refer to alphabetical model index for the list of available models.

The company endeavours to continuously improve and renew its products; for this reason the technical data and contents of this catalogue may undergo variations without prior notice. For correct installation and use, the company can guarantee only the data indicated in the instruction manual supplied with the products.

M6.5 SERIES

There are millions of inductive sensors deployed in almost every area of factory automation. They detect metal objects contactless and are distinguished by a long operating life and extreme robustness. The Datalogic Automation inductive family provides the right solution to market requirements, offering a wide range of cylindrical and rectangular standard sensors with one or two set switching distances, available also with two, three or four wires connection models, short and standard housing and cable or connector version. Stainless steel version for both harsh environments or for FOOD applications.

HIGHLIGHTS

- Wide range: suitable practically for all the industrial applications
- Stainless steel versions: suitable for food applications
- 1X and 2 X operating distances: high detection reliability and precise reading
- 2, 3 or 4 wire connection: flexible connection system to meet customer applications

APPLICATIONS

Automatic warehouse

Automotive

Trasportation lines

Packaging lines

10÷30 V DC - 3 WIRES NPN OR PNP OUTPUT

- Range, 1,5mm to 2mm - flush, non flush
- NO or NC select
- Cable or M8 quick connect models
- Stainless steel housing

WIRING DIAGRAMS

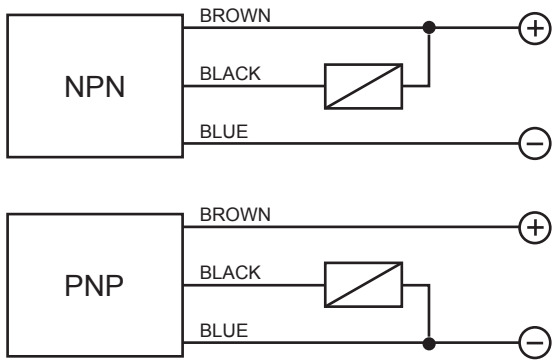

TECHNICAL DATA

	FLUSH	NON FLUSH
NOMINAL SWITCHING DISTANCE (Sn)	1,5 mm	2 mm
NOMINAL VOLTAGE	10 ÷ 30 VDC (-15 / +10%)	
RESIDUAL RIPPLE	≤ 10%	
HYSTERESIS	< 10%	
MAX. OUTPUT CURRENT	200 mA	
RESIDUAL CURRENT	< 10 mA	
VOLTAGE DROP (Sensor ON)	< 1.2 V (I = 100 mA)	
OPERATION LED	Present	
SWITCHING FREQUENCY	1000 Hz	
START UP DELAY	≤ 50 ms	
REPEATABILITY	≤ 3%	
SHORT CIRCUIT PROTECTION	Present (self-resetting)	
ELECTRIC PROTECTIONS	Against polarity reversal inductive loads	
TEMPERATURE LIMITS	- 25 ÷ +70 °C	
PROTECTION DEGREE	IP 67	
CABLE LENGTH	2 m	
CABLE SECTION	3 x 0,14 mm^2	
HOUSING MATERIAL	Stainless steel Nickel-plated brass	
WEIGHT - Cable output -	80 g	
WEIGHT M8 connector output	40 g	

CONNECTION WITH CONNECTOR M8

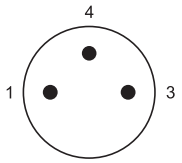

View of triple male connector

CONTACTS CONFIGURATION

Available	Contacts numbers		
	1 BROWN	3 BLUE	4 BLACK
NPN/PNP	+	–	NO/NC

DIMENSIONS (mm)

CONFIGURATION WITH CABLE

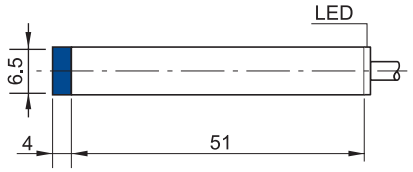

CONFIGURATION WITH CONNECTOR M8

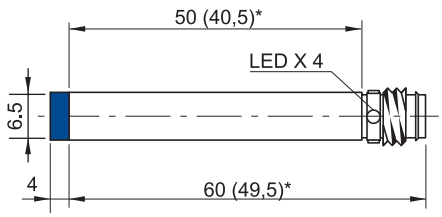

SHORT HOUSING

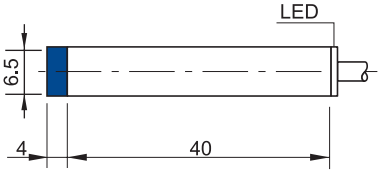

(*) The dimensions into brackets refer to short housing models
Note: the front part in blue refers to non flush models

10÷30 V DC - 3 WIRES NPN OR PNP OUTPUT

- Range, 2mm to 3mm - flush, non flush
- Short housing models
- Cable or M8 quick connect models
- 200mA NPN or PNP
- Operation LED

WIRING DIAGRAMS

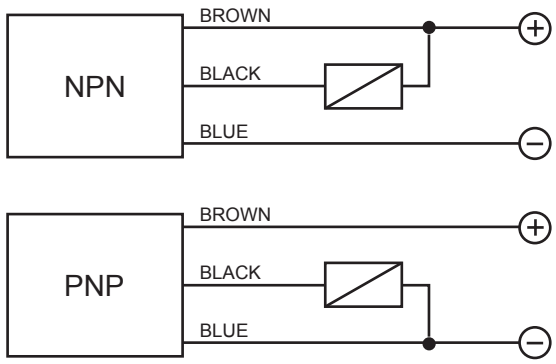

TECHNICAL DATA

	FLUSH	NON FLUSH
NOMINAL SWITCHING DISTANCE (Sn)	2 mm	3 mm
NOMINAL VOLTAGE	10 ÷ 30 VDC (-15 / +10%)	
RESIDUAL RIPPLE	≤ 10%	
HYSTERESIS	< 10%	
MAX. OUTPUT CURRENT	200 mA	
RESIDUAL CURRENT	< 10 mA	
VOLTAGE DROP (Sensor ON)	< 1.2 V (I = 100 mA)	
OPERATION LED	Yellow	
SWITCHING FREQUENCY	500 Hz	
START UP DELAY	≤ 75 ms	
REPEATABILITY	≤ 3%	
SHORT CIRCUIT PROTECTION	Present (self-resetting)	
ELECTRIC PROTECTIONS	Against polarity reversal inductive loads	
TEMPERATURE LIMITS	- 25 ÷ +70 °C	
PROTECTION DEGREE	IP 67	
CABLE LENGTH	2 m	
CABLE SECTION	3 x 0,14 mm^2	
HOUSING MATERIAL	Nickel-plated brass	
WEIGHT - Cable output -	80 g	
WEIGHT M8 connector output	40 g	

CE c UL US LISTED

CONNECTION WITH CONNECTOR M8

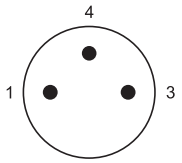

View of triple male connector

CONTACTS CONFIGURATION

Available	Contacts numbers		
	1 BROWN	3 BLUE	4 BLACK
NPN/PNP	+	–	NO/NC

DIMENSIONS (mm)

CONFIGURATION WITH CABLE

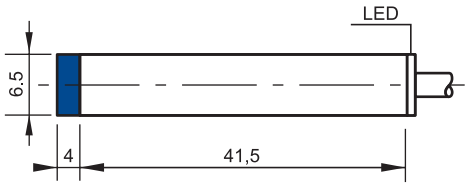

CONFIGURATION WITH CONNECTOR M8

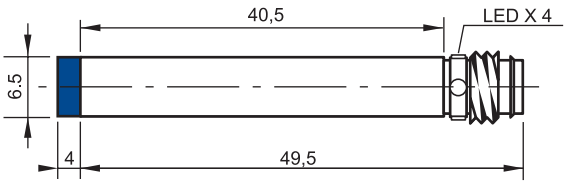

Note: the front part in blue refers to non flush models

NAMUR

- 5÷24 V DC - 2 WIRES
- Range, 1mm to 2mm - flush, non flush
- Cable or M8 quick connect models

WIRING DIAGRAMS

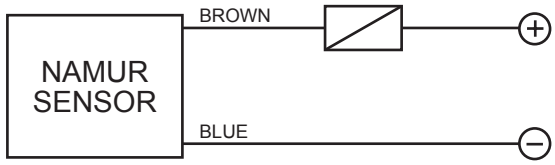

TECHNICAL DATA

	FLUSH	NON FLUSH
NOMINAL SWITCHING DISTANCE (Sn)	1 mm	2 mm
NOMINAL VOLTAGE (Load resistence 1 K)	7.7 ÷ 9 V DC	
DC SUPPLY VOLTAGE	5 ÷ 24 V DC	
RESIDUAL RIPPLE	≤ 10%	
HYSTERESIS	≤ 10%	
OUTPUT CURRENT (Metal present)	≤ 1 mA	
OUTPUT CURRENT (Metal absent)	≤ 3 mA	
SWITCHING FREQUENCY	2000 Hz	
REPEATABILITY	≤ 3%	
TEMPERATURE LIMITS	-25 ÷ +60 °C	
PROTECTION DEGREE	IP 67	
DEVICE MARKING	Ex II 3D IP67 T6X	
CABLE LENGTH	2 m	
CABLE SECTION	2 x 0.25 mm²	
HOUSING MATERIAL	Stainless Steel	
WEIGHT - Cable output -	80 g	
WEIGHT M8 connector output	35 g	

CONNECTION WITH CONNECTOR M8

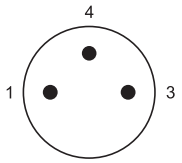

View of triple male connector

CONTACTS CONFIGURATION

Available	Contacts numbers		
	1	3	4
NAMUR	+	–	

DIMENSIONS (mm)

CONFIGURATION WITH CABLE

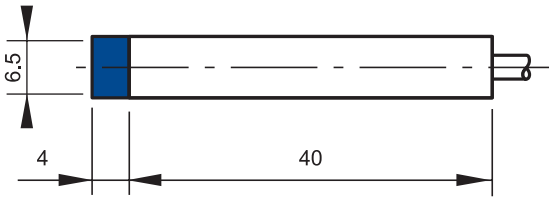

CONFIGURATION WITH CONNECTOR M8

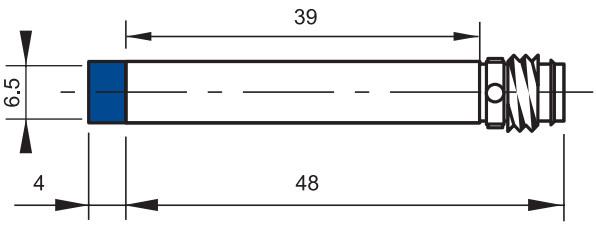

Note: the front part in blue refers to non flush models

MODEL SELECTION AND ORDER INFORMATION

2MT CABLE

CODE	MODEL	RANGE	HOUSING	STEEL AISI304	FLUSH	WIRES	NPN/PNP	NO/NC
95B064650	IS-65-A3-03	1X	STANDARD		•	3	NPN	NO
95B064660	IS-65-G3-03	2X	SHORT		•	3	NPN	NO
95B064670	IS-65-B3-03	1X	SHORT		•	3	NPN	NO
95B064680	IS-65-M3-03	1X	SHORT	•	•	3	NPN	NO
95B064690	IS-65-A4-03	1X	STANDARD		•	3	NPN	NC
95B064700	IS-65-G4-03	2X	SHORT		•	3	NPN	NC
95B064710	IS-65-B4-03	1X	SHORT		•	3	NPN	NC
95B064720	IS-65-M4-03	1X	SHORT	•	•	3	NPN	NC
95B064730	IS-65-A1-03	1X	STANDARD		•	3	PNP	NO
95B064740	IS-65-G1-03	2X	SHORT		•	3	PNP	NO
95B064750	IS-65-B1-03	1X	SHORT		•	3	PNP	NO
95B064760	IS-65-M1-03	1X	SHORT	•	•	3	PNP	NO
95B064770	IS-65-A2-03	1X	STANDARD		•	3	PNP	NC
95B064780	IS-65-G2-03	1X	SHORT		•	3	PNP	NC
95B064790	IS-65-B2-03	1X	SHORT		•	3	PNP	NC
95B064800	IS-65-M2-03	1X	SHORT	•	•	3	PNP	NC
95B064810	IS-65-C3-03	1X	STANDARD		•	3	NPN	NO
95B064820	IS-65-H3-03	2X	SHORT			3	NPN	NO
95B064830	IS-65-D3-03	1X	SHORT			3	NPN	NO
95B064840	IS-65-N3-03	1X	SHORT	•		3	NPN	NO
95B064850	IS-65-C4-03	1X	STANDARD			3	NPN	NC
95B064860	IS-65-H4-03	2X	SHORT			3	NPN	NC
95B064870	IS-65-D4-03	1X	SHORT			3	NPN	NC
95B064880	IS-65-N4-03	1X	SHORT	•		3	NPN	NC
95B064890	IS-65-C1-03	1X	STANDARD			3	PNP	NO
95B064900	IS-65-H1-03	2X	STANDARD			3	PNP	NO
95B064910	IS-65-D1-03	1X	SHORT			3	PNP	NO
95B064920	IS-65-N1-03	1X	SHORT	•		3	PNP	NO
95B064930	IS-65-C2-03	1X	STANDARD			3	PNP	NC
95B064940	IS-65-H2-03	2X	SHORT			3	PNP	NC
95B064950	IS-65-D2-03	1X	SHORT			3	PNP	NC
95B064960	IS-65-N2-03	1X	SHORT	•		3	PNP	NC
95B066290	IS-65-A20-03	1X	STANDARD			2		
95B066300	IS-65-C20-03	1X	STANDARD			2		

MODEL SELECTION AND ORDER INFORMATION

M8 CONNECTOR

CODE	MODEL	RANGE	HOUSING	STEEL AISI304	FLUSH	WIRES	NPN/PNP	NO/NC
95B064970	IS-65-A3-S1	1X	STANDARD		•	3	NPN	NO
95B064980	IS-65-G3-S1	2X	SHORT		•	3	NPN	NO
95B064990	IS-65-B3-S1	1X	SHORT		•	3	NPN	NO
95B066000	IS-65-M3-S1	1X	SHORT	•	•	3	NPN	NO
95B066010	IS-65-A4-S1	1X	STANDARD		•	3	NPN	NC
95B066020	IS-65-G4-S1	2X	SHORT		•	3	NPN	NC
95B066030	IS-65-B4-S1	1X	SHORT		•	3	NPN	NC
95B066040	IS-65-M4-S1	1X	SHORT	•	•	3	NPN	NC
95B066050	IS-65-A1-S1	1X	STANDARD		•	3	PNP	NO
95B066060	IS-65-G1-S1	2X	SHORT		•	3	PNP	NO
95B066070	IS-65-B1-S1	1X	SHORT		•	3	PNP	NO
95B066080	IS-65-M1-S1	1X	SHORT	•	•	3	PNP	NO
95B066090	IS-65-A2-S1	1X	STANDARD		•	3	PNP	NC
95B066100	IS-65-G2-S1	2X	SHORT		•	3	PNP	NC
95B066110	IS-65-B2-S1	1X	SHORT		•	3	PNP	NC
95B066120	IS-65-M2-S1	1X	SHORT	•	•	3	PNP	NC
95B066130	IS-65-C3-S1	1X	STANDARD			3	NPN	NO
95B066140	IS-65-H3-S1	2X	SHORT			3	NPN	NO
95B066150	IS-65-D3-S1	1X	SHORT			3	NPN	NO
95B066160	IS-65-N3-S1	1X	SHORT	•		3	NPN	NO
95B066170	IS-65-C4-S1	1X	STANDARD			3	NPN	NC
95B066180	IS-65-H4-S1	2X	SHORT			3	NPN	NC
95B066190	IS-65-D4-S1	1X	SHORT			3	NPN	NC
95B066200	IS-65-N4-S1	1X	SHORT	•		3	NPN	NC
95B066210	IS-65-C1-S1	1X	STANDARD			3	PNP	NO
95B066220	IS-65-H1-S1	2X	SHORT			3	PNP	NO
95B066230	IS-65-D1-S1	1X	SHORT			3	PNP	NO
95B066240	IS-65-N1-S1	1X	SHORT	•		3	PNP	NO
95B066250	IS-65-C2-S1	1X	STANDARD			3	PNP	NC
95B066260	IS-65-H2-S1	2X	SHORT			3	PNP	NC
95B066270	IS-65-D2-S1	1X	SHORT			3	PNP	NC
95B066280	IS-65-N2-S1	1X	SHORT	•		3	PNP	NC
95B066310	IS-65-A20-S1	1X	STANDARD			2		
95B066320	IS-65-C20-S1	1X	STANDARD			2		

MODEL DESCRIPTION

IS - 04 - A 1 - 03

DIAMETER
04 = 4mm
05 = 5mm
65 = 6,5mm
08 = 8mm
12 = 12mm
18 = 18mm
30 = 30mm
40 = 40x40mm SQUARE
80 = 80x80mm SQUARE
88 = 8x8mm SQUARE

CONSTRUCTION
A= flush standard housing
B= flush short housing
BB= flush extra short housing
C= non flush standard housing
D= non flush short housing
E= flush standard housing double range
F= non flush standard housing double range
G= flush short housing double range
GG= flush extra short housing double range
H= non flush short housing double range
I= flush standard housing metal face
L= non flush standard housing metal face
M= flush short housing steel
N= non flush short housing steel
O= flush short housing steel double range
P= non flush short housing steel double range
Q= flush 8x8mm square housing
R= flush 8x8mm square housing double range
S= flush standard housing steel
T= non flush standard housing steel
U= flush standard housing steel double range
V= non flush standard housing steel double range
W= flush 40x40mm square housing
X= flush 40x40mm short square housing
Y= non flush 40x40mm square housing
Z= non flush 40x40mm short square housing

OUTPUT
1 = 10-30 Vdc PNP NO
2 = 10-30 Vdc PNP NC
3 = 10-30 Vdc NPN NO
4 = 10-30 Vdc NPN NC
5 = 10-30 Vdc PNP NO-NC
6 = 10-30 Vdc NPN NO-NC
7 = 24-230Vac – 2 wires NO
8 = 24-230Vac – 2 wires NC
9 = 10-30 Vdc - 2 wires NO-NC
0 = 10-30 Vdc - 4 wires
11 = Analog 4-20mA
12 = Analog 0-10V
13 = Analog 0-10V/4-20mA
14 = Analog 0-5V/1-5mA
15 = 20-250Vac/Vdc-2 and 3 wires NO
20 = NAMUR

CONNECTION
02 = Cable 500mm
03 = Cable 2mt
04 = Cable 700mm
S1 = M8 connector
S2 = M12 connector
S3 = terminal block*
S4 = unf 1/2”

*
only for square housing version

Note: Not all code combinations are available. Please refer to alphabetical model index for the list of available models.

The company endeavours to continuously improve and renew its products; for this reason the technical data and contents of this catalogue may undergo variations without prior notice. For correct installation and use, the company can guarantee only the data indicated in the instruction manual supplied with the products.

M8 SERIES

There are millions of inductive sensors deployed in almost every area of factory automation. They detect metal objects contactless and are distinguished by a long operating life and extreme robustness. The Datalogic Automation inductive family provides the right solution to market requirements, offering a wide range of cylindrical and rectangular standard sensors with one or two set switching distances, available also with two, three or four wires connection models, short and standard housing and cable or connector version. Stainless steel version for both harsh environments or for FOOD applications.

HIGHLIGHTS

- Wide range: suitable practically for all the industrial applications
- Stainless steel versions: suitable for food applications
- 1X and 2 X operating distances: high detection reliability and precise reading
- 2, 3 or 4 wire connection: flexible connection system to meet customer applications

APPLICATIONS

Automatic warehouse

Automotive

Trasportation lines

Packaging lines

10÷30 V DC - 3 WIRES NPN OR PNP OUTPUT

- Range, 1,5mm to 2mm - flush, non flush
- Short housing models
- Cable or M8 and M12 quick connect models
- Operation LED
- Stainless steel housing

WIRING DIAGRAMS

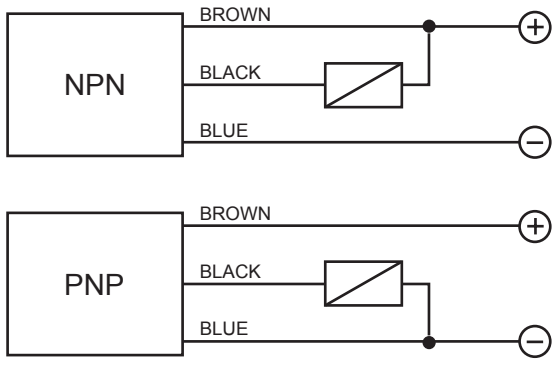

TECHNICAL DATA

	FLUSH	NON FLUSH
NOMINAL SWITCHING DISTANCE (Sn)	1,5 mm	2 mm
NOMINAL VOLTAGE	10 ÷ 30 VDC (-15 / +10%)	
RESIDUAL RIPPLE	≤ 10%	
HYSTERESIS	< 10%	
MAX. OUTPUT CURRENT	200 mA	
RESIDUAL CURRENT	< 10 mA	
VOLTAGE DROP (Sensor ON)	< 1.2 V (I = 100 mA)	
OPERATION LED	Yellow	
SWITCHING FREQUENCY	1000 Hz	
START UP DELAY	≤ 50 ms	
REPEATABILITY	≤ 3%	
SHORT CIRCUIT PROTECTION	Present (self-resetting)	
ELECTRIC PROTECTIONS	Against polarity reversal - inductive loads	
TEMPERATURE LIMITS	- 25 ÷ +70 °C	
PROTECTION DEGREE	IP 67	
CABLE LENGTH	2 m	
CABLE SECTION	3 x 0,14 mm	
HOUSING MATERIAL	Stainless Steel Nickel-plated brass	
WEIGHT - Cable output -	80 g	
WEIGHT - M8 connector output -	40 g	
WEIGHT - M12 connector output -	55 g	

CONNECTION WITH CONNECTOR M12

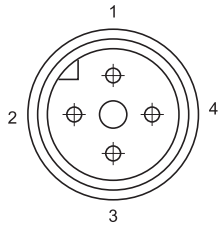

View of quadripole male connector

CONTACTS CONFIGURATION

Available	1	2	3	4
(NO or NC)	+		–	NO/NC

CONNECTION WITH CONNECTOR M8

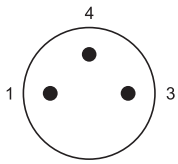

View of triple male connector

CONTACTS CONFIGURATION

Available	Contacts numbers		
	1	3	4
(NO or NC)	+	–	NO/NC

DIMENSIONS (mm)

CONFIGURATION WITH CABLE

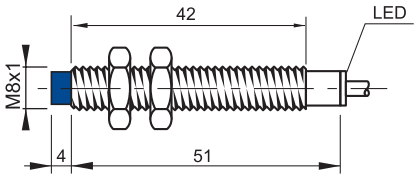

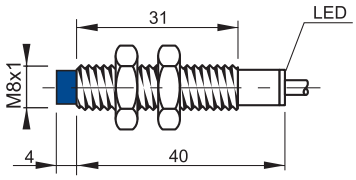

SHORT HOUSING

CONFIGURATION WITH CONNECTOR K

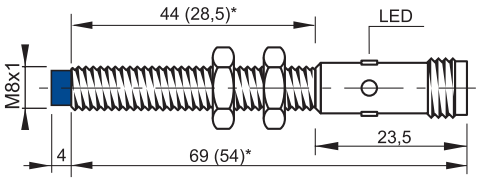

CONFIGURATION WITH CONNECTOR M8

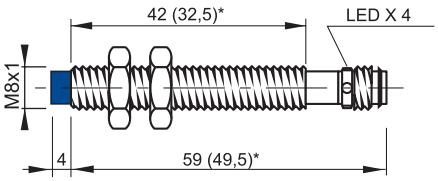

(*) The dimensions into brackets refer to short housing models. Note: the front part in blue refers to non flush models

10÷30 V DC - 3 WIRES NPN OR PNP OUTPUT

- Range, 2mm to 3mm - flush, non flush
- Short housing models
- 200mA NPN or PNP
- Operation LED
- Cable or M8 and M12 quick connect models

WIRING DIAGRAMS

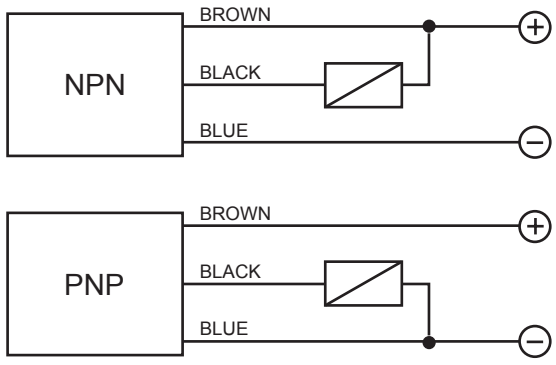

TECHNICAL DATA

	FLUSH	NON FLUSH
NOMINAL SWITCHING DISTANCE (Sn)	2 mm	3 mm
NOMINAL VOLTAGE	10 ÷ 30 VDC (-15 / +10%)	
RESIDUAL RIPPLE	≤ 10%	
HYSTERESIS	< 10%	
MAX. OUTPUT CURRENT	200 mA	
RESIDUAL CURRENT	< 10 mA	
VOLTAGE DROP (Sensor ON)	< 1.2 V (I = 100 mA)	
OPERATION LED	Yellow	
SWITCHING FREQUENCY	500 Hz	
START UP DELAY	≤ 75 ms	
REPEATABILITY	≤ 3%	
SHORT CIRCUIT PROTECTION	Present (self-resetting)	
ELECTRIC PROTECTIONS	Against polarity reversal inductive loads	
TEMPERATURE LIMITS	- 25 ÷ +70 °C	
PROTECTION DEGREE	IP 67	
CABLE LENGTH	2 m	
CABLE SECTION	3 x 0,14 mm²	
HOUSING MATERIAL	Nickel-plated brass	
WEIGHT - Cable output -	80 g	
WEIGHT - M8 connector output -	40 g	
WEIGHT - M12 connector output -	55 g	

CE c UL US LISTED

CONNECTION WITH CONNECTOR M12

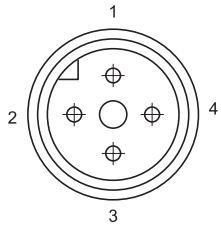

View of quadripole male connector

CONTACTS CONFIGURATION

Available	1	2	3	4
(NO or NC)	+		–	NO/NC

CONNECTION WITH CONNECTOR M8

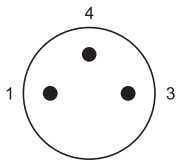

View of triple male connector

CONTACTS CONFIGURATION

Available	Contacts numbers		
	1	3	4
(NO or NC)	+	–	NO/NC

DIMENSIONS (mm)

CONFIGURATION WITH CABLE

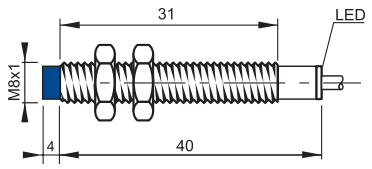

CONFIGURATION WITH CONNECTOR M12

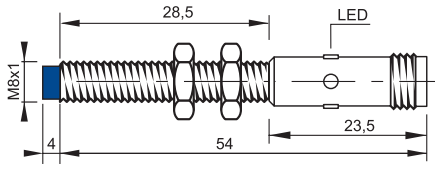

CONFIGURATION WITH CONNECTOR M8

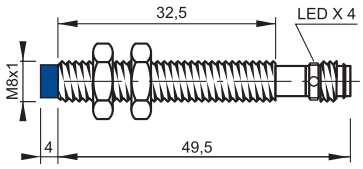

Note: the front part in blue refers to non flush models

NAMUR

- 5÷24 V DC - 2 WIRES
- Range, 1mm to 2mm - flush, non flush
- Cable or M8 and M12 quick connect models

WIRING DIAGRAMS

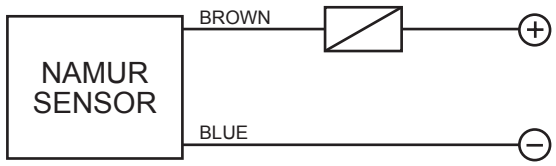

TECHNICAL DATA

	FLUSH	NON FLUSH
NOMINAL SWITCHING DISTANCE (Sn)	1 mm	2 mm
NOMINAL VOLTAGE (Load resistence 1 K)	7.7 ÷ 9 V DC	
DC SUPPLY VOLTAGE	5 ÷ 24 V DC	
RESIDUAL RIPPLE	≤ 10%	
HYSTERESIS	≤ 10%	
OUTPUT CURRENT (Metal present)	≤ 1 mA	
OUTPUT CURRENT (Metal absent)	≤ 3 mA	
SWITCHING FREQUENCY	2000 Hz	
REPEATABILITY	≤ 3%	
TEMPERATURE LIMITS	-25 ÷ +60 °C	
PROTECTION DEGREE	IP 67	
DEVICE MARKING	Ex II 3D IP67 T6X	
CABLE LENGTH	2 m	
CABLE SECTION	2 x 0.25 mm²	
HOUSING MATERIAL	Stainless Steel	
WEIGHT - Cable output -	80 g	
WEIGHT - M8 connector output -	35 g	
WEIGHT - M12 connector output -	55 g	

CE c UL US LISTED

CONNECTION WITH CONNECTOR M12

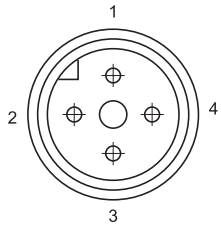

View of quadripole male connector

CONTACTS CONFIGURATION

Available	Contacts numbers			
	1	2	3	4
NAMUR	+		–	

CONNECTION WITH CONNECTOR M8

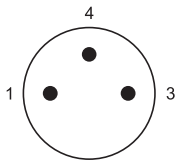

View of triple male connector

CONTACTS CONFIGURATION

Available	Contacts numbers		
	1	3	4
NAMUR	+	–	

DIMENSIONS (mm)

CONFIGURATION WITH CABLE

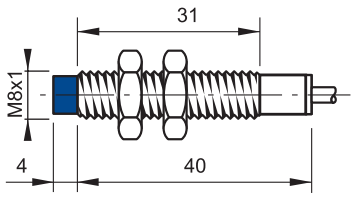

CONFIGURATION WITH CONNECTOR M12

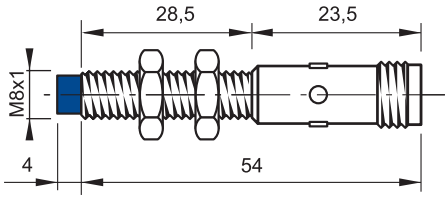

CONFIGURATION WITH CONNECTOR M8

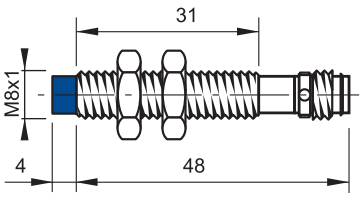

Note: the front part in blue refers to non flush models

MODEL SELECTION AND ORDER INFORMATION

2MT CABLE

CODE	MODEL	RANGE	HOUSING	STEEL AISI304	FLUSH	WIRES	NPN/PNP	NO/NC
95B061061	IS-08-A3-03	1X	STANDARD		•	3	NPN	NO
95B061861	IS-08-B3-03	1X	SHORT		•	3	NPN	NO
95B061091	IS-08-A4-03	1X	STANDARD		•	3	NPN	NC
95B061891	IS-08-B4-03	1X	SHORT		•	3	NPN	NC
95B061121	IS-08-A1-03	1X	STANDARD		•	3	PNP	NO
95B061921	IS-08-B1-03	1X	SHORT		•	3	PNP	NO
95B061151	IS-08-A2-03	1X	STANDARD		•	3	PNP	NC
95B061951	IS-08-B2-03	1X	SHORT		•	3	PNP	NC
95B062291	IS-08-D4-03	1X	SHORT			3	NPN	NC
95B061521	IS-08-C1-03	1X	STANDARD			3	PNP	NO
95B062321	IS-08-D1-03	1X	SHORT			3	PNP	NO
95B061551	IS-08-C2-03	1X	STANDARD			3	PNP	NC
95B062351	IS-08-D2-03	1X	SHORT			3	PNP	NC
95B066330	IS-08-G3-03	2X	SHORT		•	3	NPN	NO
95B066340	IS-08-M3-03	1X	SHORT	•	•	3	NPN	NO
95B066350	IS-08-G4-03	2X	SHORT		•	3	NPN	NC
95B066360	IS-08-M4-03	1X	SHORT	•	•	3	NPN	NC
95B066370	IS-08-G1-03	2X	SHORT		•	3	PNP	NO
95B066380	IS-08-M1-03	1X	SHORT	•	•	3	PNP	NO
95B066390	IS-08-G2-03	1X	SHORT		•	3	PNP	NC
95B066400	IS-08-M2-03	1X	SHORT	•	•	3	PNP	NC
95B066410	IS-08-C3-03	1X	STANDARD			3	NPN	NO
95B066420	IS-08-H3-03	2X	SHORT			3	NPN	NO
95B066430	IS-08-D3-03	1X	SHORT			3	NPN	NO
95B066440	IS-08-N3-03	1X	SHORT	•		3	NPN	NO
95B066450	IS-08-C4-03	1X	STANDARD			3	NPN	NC
95B066460	IS-08-H4-03	2X	SHORT			3	NPN	NC
95B066470	IS-08-N4-03	1X	SHORT	•		3	NPN	NC
95B066480	IS-08-H1-03	2X	SHORT			3	PNP	NO
95B066490	IS-08-N1-03	1X	SHORT	•		3	PNP	NO
95B066500	IS-08-H2-03	2X	SHORT			3	PNP	NC
95B066510	IS-08-N2-03	1X	SHORT	•		3	PNP	NC
95B066740	IS-08-A20-03	1X	STANDARD		•	2		
95B066750	IS-08-C20-03	1X	STANDARD			2		
95B066760	IS-08-A20-03	1X	STANDARD	•	•	2		
95B066770	IS-08-C20-03	1X	STANDARD	•		2		

MODEL SELECTION AND ORDER INFORMATION

M8 CONNECTOR

CODE	MODEL	RANGE	HOUSING	STEEL AISI304	FLUSH	WIRES	NPN/PNP	NO/NC
95B061081	IS-08-A3-S1	1X	STANDARD		•	3	NPN	NO
95B061111	IS-08-A4-S1	1X	STANDARD		•	3	NPN	NC
95B063131	IS-08-G4-S1	2X	STANDARD		•	3	NPN	NC
95B061141	IS-08-A1-S1	1X	STANDARD		•	3	PNP	NO
95B061171	IS-08-A2-S1	1X	STANDARD		•	3	PNP	NC
95B061481	IS-08-C3-S1	1X	STANDARD			3	NPN	NO
95B061511	IS-08-C4-S1	1X	STANDARD			3	NPN	NC
95B063251	IS-08-H4-S1	2X	STANDARD			3	NPN	NC
95B061541	IS-08-C1-S1	1X	STANDARD			3	PNP	NO
95B061571	IS-08-C2-S1	1X	STANDARD			3	PNP	NC
95B066780	IS-08-A20-S1	1X	STANDARD	•	•	2		
95B066790	IS-08-C20-S1	1X	STANDARD	•		2		
95B066800	IS-08-G3-S1	2X	SHORT		•	3	NPN	NO
95B066810	IS-08-B3-S1	1X	SHORT		•	3	NPN	NO
95B066820	IS-08-M3-S1	1X	SHORT	•	•	3	NPN	NO
95B066830	IS-08-B4-S1	1X	SHORT		•	3	NPN	NC
95B066840	IS-08-M4-S1	1X	SHORT	•	•	3	NPN	NC
95B066850	IS-08-G1-S1	2X	SHORT		•	3	PNP	NO
95B066860	IS-08-B1-S1	1X	SHORT		•	3	PNP	NO
95B066870	IS-08-M1-S1	1X	SHORT	•	•	3	PNP	NO
95B066880	IS-08-G2-S1	2X	SHORT		•	3	PNP	NC
95B066890	IS-08-B2-S1	1X	SHORT		•	3	PNP	NC
95B066900	IS-08-M2-S1	1X	SHORT	•	•	3	PNP	NC
95B066910	IS-08-H3-S1	2X	SHORT			3	NPN	NO
95B066920	IS-08-D3-S1	1X	SHORT			3	NPN	NO
95B066930	IS-08-N3-S1	1X	SHORT	•		3	NPN	NO
95B066940	IS-08-D4-S1	1X	SHORT			3	NPN	NC
95B066950	IS-08-N4-S1	1X	SHORT	•		3	NPN	NC
95B066960	IS-08-H1-S1	2X	SHORT			3	PNP	NO
95B066970	IS-08-D1-S1	1X	SHORT			3	PNP	NO
95B066980	IS-08-N1-S1	1X	SHORT	•		3	PNP	NO
95B066990	IS-08-H2-S1	2X	SHORT			3	PNP	NC
95B067000	IS-08-D2-S1	1X	SHORT			3	PNP	NC
95B067010	IS-08-N2-S1	1X	SHORT	•		3	PNP	NC

MODEL SELECTION AND ORDER INFORMATION

M12 CONNECTOR

CODE	MODEL	RANGE	HOUSING	STEEL AISI304	FLUSH	WIRES	NPN/PNP	NO/NC
95B061071	IS-08-A3-S2	1X	STANDARD		•	3	NPN	NO
95B061101	IS-08-A4-S2	1X	STANDARD		•	3	NPN	NC
95B061131	IS-08-A1-S2	1X	STANDARD		•	3	PNP	NO
95B061161	IS-08-A2-S2	1X	STANDARD		•	3	PNP	NC
95B061471	IS-08-C3-S2	1X	STANDARD			3	NPN	NO
95B061501	IS-08-C4-S2	1X	STANDARD			3	NPN	NC
95B063241	IS-08-H4-S2	2X	SHORT			3	NPN	NC
95B061531	IS-08-C1-S2	1X	STANDARD			3	PNP	NO
95B061561	IS-08-C2-S2	1X	STANDARD			3	PNP	NC
95B063301	IS-08-H2-S2	1X	SHORT			3	PNP	NC
95B066520	IS-08-G3-S2	2X	SHORT		•	3	NPN	NO
95B066530	IS-08-B3-S2	1X	SHORT		•	3	NPN	NO
95B066540	IS-08-M3-S2	1X	SHORT	•	•	3	NPN	NO
95B066550	IS-08-G4-S2	2X	SHORT		•	3	NPN	NC
95B066560	IS-08-B4-S2	1X	SHORT		•	3	NPN	NC
95B066570	IS-08-M4-S2	1X	SHORT	•	•	3	NPN	NC
95B066580	IS-08-G1-S2	2X	SHORT		•	3	PNP	NO
95B066590	IS-08-B1-S2	1X	SHORT		•	3	PNP	NO
95B066600	IS-08-M1-S2	1X	SHORT	•	•	3	PNP	NO
95B066610	IS-08-G2-S2	2X	SHORT		•	3	PNP	NC
95B066620	IS-08-B2-S2	1X	SHORT		•	3	PNP	NC
95B066630	IS-08-M2-S2	1X	SHORT	•	•	3	PNP	NC
95B066640	IS-08-H3-S2	2X	SHORT			3	NPN	NO
95B066650	IS-08-D3-S2	1X	SHORT			3	NPN	NO
95B066660	IS-08-N3-S2	1X	SHORT	•		3	NPN	NO
95B066670	IS-08-D4-S2	1X	SHORT			3	NPN	NC
95B066680	IS-08-N4-S2	1X	SHORT	•		3	NPN	NC
95B066690	IS-08-H1-S2	2X	SHORT			3	PNP	NO
95B066700	IS-08-D1-S2	1X	SHORT			3	PNP	NO
95B066710	IS-08-N1-S2	1X	SHORT	•		3	PNP	NO
95B066720	IS-08-D2-S2	1X	SHORT			3	PNP	NC
95B066730	IS-08-N2-S2	1X	SHORT	•		3	PNP	NC
95B066760	IS-08-A20-S2	1X	STANDARD	•	•	2		
95B066770	IS-08-C20-S2	1x	STANDARD	•		2		

MODEL DESCRIPTION

IS - 04 - A 1 - 03

DIAMETER
04 = 4mm
05 = 5mm
65 = 6,5mm
08 = 8mm
12 = 12mm
18 = 18mm
30 = 30mm
40 = 40x40mm SQUARE
80 = 80x80mm SQUARE
88 = 8x8mm SQUARE

CONSTRUCTION
A= flush standard housing
B= flush short housing
BB= flush extra short housing
C= non flush standard housing
D= non flush short housing
E= flush standard housing double range
F= non flush standard housing double range
G= flush short housing double range
GG= flush extra short housing double range
H= non flush short housing double range
I= flush standard housing metal face
L= non flush standard housing metal face
M= flush short housing steel
N= non flush short housing steel
O= flush short housing steel double range
P= non flush short housing steel double range
Q= flush 8x8mm square housing
R= flush 8x8mm square housing double range
S= flush standard housing steel
T= non flush standard housing steel
U= flush standard housing steel double range
V= non flush standard housing steel double range
W= flush 40x40mm square housing
X= flush 40x40mm short square housing
Y= non flush 40x40mm square housing
Z= non flush 40x40mm short square housing

OUTPUT
1 = 10-30 Vdc PNP NO
2 = 10-30 Vdc PNP NC
3 = 10-30 Vdc NPN NO
4 = 10-30 Vdc NPN NC
5 = 10-30 Vdc PNP NO-NC
6 = 10-30 Vdc NPN NO-NC
7 = 24-230Vac – 2 wires NO
8 = 24-230Vac – 2 wires NC
9 = 10-30 Vdc - 2 wires NO-NC
0 = 10-30 Vdc - 4 wires
11 = Analog 4-20mA
12 = Analog 0-10V
13 = Analog 0-10V/4-20mA
14 = Analog 0-5V/1-5mA
15 = 20-250Vac/Vdc-2 and 3 wires NO
20 = NAMUR

CONNECTION
02 = Cable 500mm
03 = Cable 2mt
04 = Cable 700mm
S1 = M8 connector
S2 = M12 connector
S3 = terminal block*
S4 = unf 1/2”

*
only for square housing version

Note: Not all code combinations are available. Please refer to alphabetical model index for the list of available models.

The company endeavours to continuously improve and renew its products; for this reason the technical data and contents of this catalogue may undergo variations without prior notice. For correct installation and use, the company can guarantee only the data indicated in the instruction manual supplied with the products.

M12 SERIES

There are millions of inductive sensors deployed in almost every area of factory automation. They detect metal objects contactless and are distinguished by a long operating life and extreme robustness. The Datalogic Automation inductive family provides the right solution to market requirements, offering a wide range of cylindrical and rectangular standard sensors with one or two set switching distances, available also with two, three or four wires connection models, short and standard housing and cable or connector version. Stainless steel version for both harsh environments or for FOOD applications.

Diversey ECOLAB

HIGHLIGHTS

- Wide range: suitable practically for all the industrial applications
- Stainless steel versions: suitable for food applications
- 1X and 2 X operating distances: high detection reliability and precise reading
- 2, 3 or 4 wire connection: flexible connection system to meet customer applications

APPLICATIONS

Automatic warehouse

Automotive

Trasportation lines

Packaging lines

10÷30 V DC - 3 WIRES NPN OR PNP OUTPUT

- Range, 2mm to 4mm - flush, non flush
- Short housing models
- Cable or M8 and M12 quick connect models
- Operation LED
- Stainless steel housing

WIRING DIAGRAMS

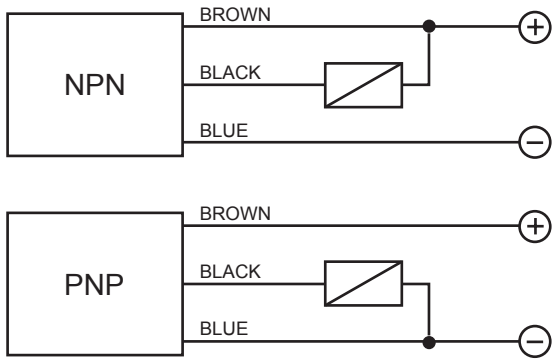

TECHNICAL DATA

	FLUSH	NON FLUSH
NOMINAL SWITCHING DISTANCE (Sn)	2 mm	4 mm
NOMINAL VOLTAGE	10 ÷ 30 VDC (-15 / +10%)	
RESIDUAL RIPPLE	≤ 10%	
HYSTERESIS	< 10%	
MAX. OUTPUT CURRENT	200 mA	
RESIDUAL CURRENT	< 10 mA	
VOLTAGE DROP (Sensor ON)	< 1.8 V (I = 100 mA)	
OPERATION LED	Yellow	
SWITCHING FREQUENCY	1000 Hz	
START UP DELAY	≤ 50 ms	
REPEATABILITY	≤ 3%	
SHORT CIRCUIT PROTECTION	Present (self-resetting)	
ELECTRIC PROTECTIONS	Against polarity reversal - inductive loads	
TEMPERATURE LIMITS	- 25 ÷ +60 °C	
PROTECTION DEGREE	IP 67	
CABLE LENGTH	2 m	
CABLE SECTION	3 x 0,25 mm²	
HOUSING MATERIAL	Nickel-plated brass Stainless steel	
WEIGHT - Cable output -	110 g	
WEIGHT - M12 connector output -	60 g	

CONNECTION WITH CONNECTOR M12

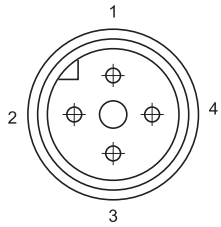

View of quadripole male connector

CONTACTS CONFIGURATION

Available	Contacts numbers			
	1	2	3	4
(NO or NC)	+		–	NO/NC

c UL US LISTED

DIMENSIONS (mm)

CONFIGURATION WITH CABLE

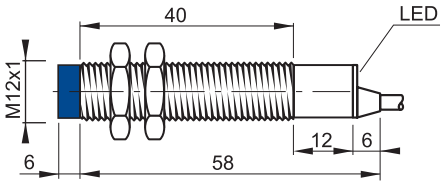

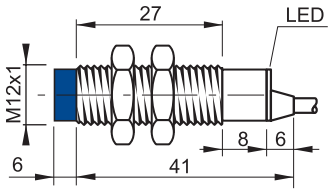

SHORT HOUSING

CONFIGURATION WITH CONNECTOR M12

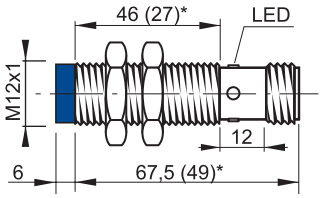

(*) The dimensions into brackets refer to short housing models. Note: the front part in blue refers to non flush models

10÷30 V DC - 3 WIRES NPN OR PNP OUTPUT

- Range, 4mm to 8mm - flush, non flush
- Short housing models
- Cable or M12 quick connect models
- Operation LED

WIRING DIAGRAMS

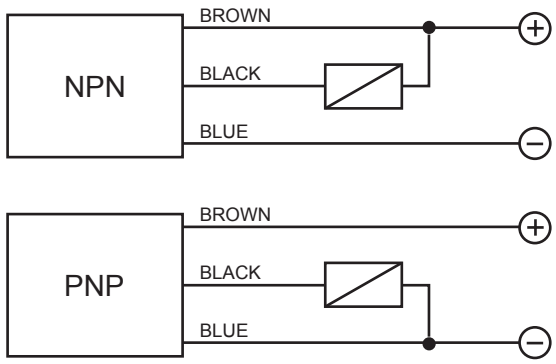

TECHNICAL DATA

	FLUSH	NON FLUSH
NOMINAL SWITCHING DISTANCE (Sn)	4 mm	8 mm
NOMINAL VOLTAGE	10 ÷ 30 VDC (-15 / +10%)	
RESIDUAL RIPPLE	≤ 10%	
HYSTERESIS	< 10%	
MAX. OUTPUT CURRENT	200 mA	
RESIDUAL CURRENT	< 10 mA	
VOLTAGE DROP (Sensor ON)	< 1.2 V (I = 100 mA)	
OPERATION LED	Yellow	
SWITCHING FREQUENCY	500 Hz	
START UP DELAY	≤ 75 ms	
REPEATABILITY	≤ 3%	
SHORT CIRCUIT PROTECTION	Present (self-resetting)	
ELECTRIC PROTECTIONS	Against polarity reversal inductive loads	
TEMPERATURE LIMITS	- 25 ÷ +70 °C	
PROTECTION DEGREE	IP 67	
CABLE LENGTH	2 m	
CABLE SECTION	3 x 0,25 mm^2	
HOUSING MATERIAL	Nickel-plated brass	
WEIGHT - Cable output -	110 g	
WEIGHT - M12 connector output -	60 g	

CE c UL US LISTED

CONNECTION WITH CONNECTOR M12

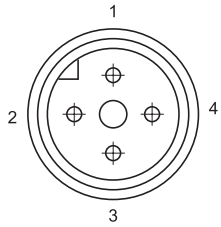

View of quadripole male connector

CONTACTS CONFIGURATION

Available	Contacts numbers			
	1	2	3	4
(NO or NC)	+		–	NO/NC

DIMENSIONS (mm)

CONFIGURATION WITH CABLE

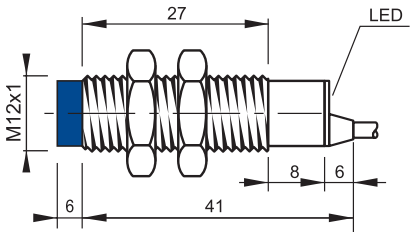

CONFIGURATION WITH CONNECTOR M12

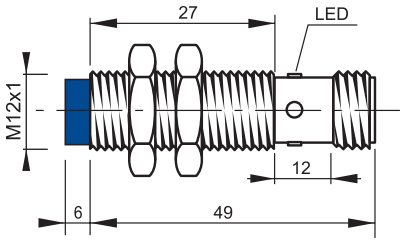

Note: the front part in white refers to non flush models

10÷30 V DC - 4 WIRES NPN OR PNP OUTPUT

- Range, 4mm to 8mm - flush, non flush
- Short housing models
- Cable or M12 quick connect models
- 200mA NPN or PNP
- Operation LED

WIRING DIAGRAMS

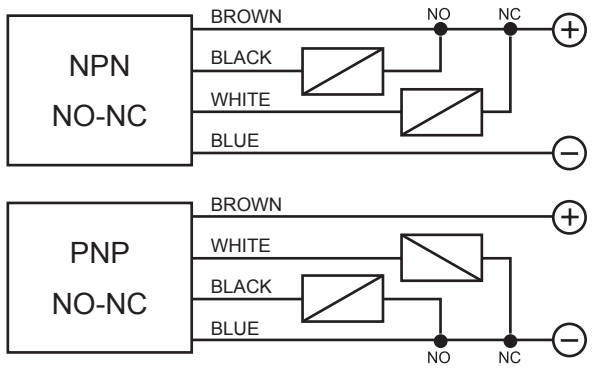

TECHNICAL DATA

	FLUSH	NON FLUSH
NOMINAL SWITCHING DISTANCE (Sn)	4 mm	8 mm
NOMINAL VOLTAGE	10 ÷ 30 VDC (-15 / +10%)	
RESIDUAL RIPPLE	≤ 10%	
HYSTERESIS	< 10%	
MAX. OUTPUT CURRENT	200 mA	
RESIDUAL CURRENT	< 10 mA	
VOLTAGE DROP (Sensor ON)	< 1.2 V (I = 100 mA)	
OPERATION LED	Yellow	
SWITCHING FREQUENCY	500 Hz	
START UP DELAY	≤ 75 ms	
REPEATABILITY	≤ 3%	
SHORT CIRCUIT PROTECTION	Present (self-resetting)	
ELECTRIC PROTECTIONS	Against polarity reversal inductive loads	
TEMPERATURE LIMITS	- 25 ÷ +70 °C	
PROTECTION DEGREE	IP 67	
CABLE LENGTH	2 m	
CABLE SECTION	3 x 0,25 mm²	
HOUSING MATERIAL	Nickel-plated brass	
WEIGHT - Cable output -	110 g	
WEIGHT - M12 connector output -	60 g	

CONNECTION WITH CONNECTOR M12

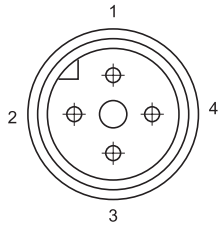

View of quadripole male connector

CONTACTS CONFIGURATION

Available	Contacts numbers			
	1	2	3	4
(NO + NC)	+	NC	–	NO

DIMENSIONS (mm)

CONFIGURATION WITH CABLE

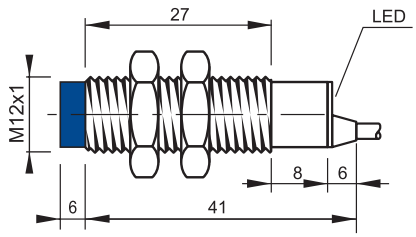

CONFIGURATION WITH CONNECTOR M12

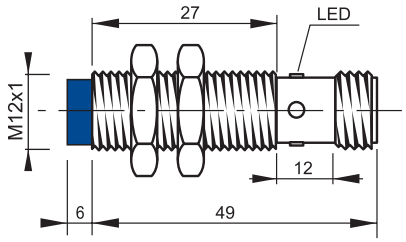

Note: the front part in blue refers to non flush models

12÷30 V DC - 4 WIRES PROGRAMMABLE OUTPUT

- Programmable outputs: NPN/PNP, NO or NC
- Cable or M12 quick connect models
- Nickel plated brass

TECHNICAL DATA

	FLUSH	NON FLUSH
NOMINAL SWITCHING DISTANCE (Sn)	2 mm	4 mm
NOMINAL VOLTAGE	12 ÷ 30 VDC (-15/+10%)	
RESIDUAL RIPPLE	≤ 10%	
HYSTERESIS	< 10%	
OUTPUT	NPN or PNP (may be selected)	
CONTACT	NO or NC (may be selected)	
MAX. CURRENT OUTPUT	200 mA	
ABSORPTION AT 24 VDC	< 1.2 mA	
VOLTAGE DROP (Sensor ON)	< 1,8 V (I = 100 mA)	
OPERATION LED	Yellow	
SWITCHING FREQUENCY	1000 Hz	
START UP DELAY	≤ 50 ms	
REPEATABILITY	≤ 3%	
SHORT CIRCUIT PROTECTION	Present (self-resetting)	
ELECTRIC PROTECTIONS	Against polarity reversal - inductive loads	
TEMPERATURE LIMITS	- 25 ÷ +70 °C	
PROTECTION DEGREE	IP 67	
CABLE LENGTH	2 m	
CABLE SECTION	4 x 0.25 mm²	
HOUSING MATERIAL	Nickel-plated brass	
WEIGHT - Cable output -	110 g	
WEIGHT - M12 connector output -	60 g	

CE c UL US LISTED

WIRING DIAGRAMS

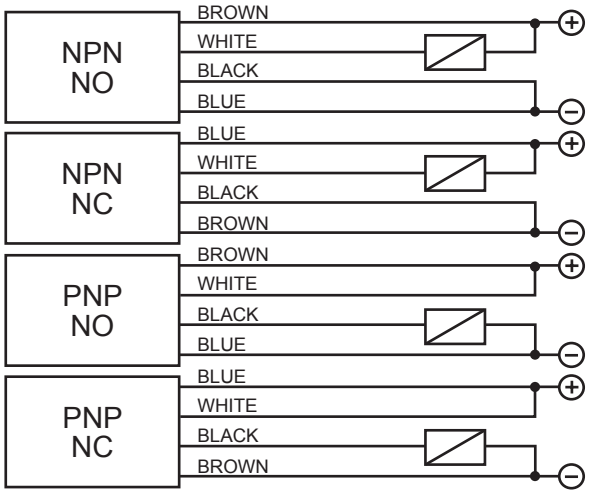

Thanks to the output status which is not paired with the rest of the circuit, the sensors of this kind of availability give enormous advantages, such as the possibility of obtaining the four output configurations (NPN-NO, NPN-NC, PNP-NO, PNP-NC,) on the same model.

CONNECTION WITH CONNECTOR M12

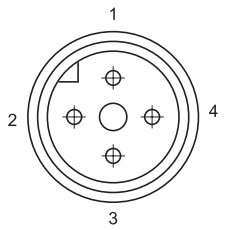

View of quadripole male connector

CONTACTS CONFIGURATION

Output	Contacts numbers			
	1	2	3	4
NPN NO	+	NO	–	–
NPN NC	–	NC	+	–
PNP NO	+	+	–	NO
PNP NC	–	+	+	NC

DIMENSIONS (mm)

CONFIGURATION WITH CABLE

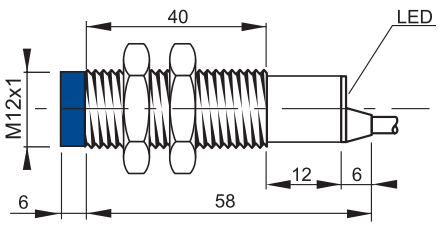

CONFIGURATION WITH CONNECTOR M12

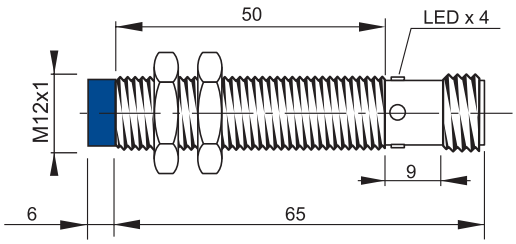

Note: the front part in blue refers to non flush models.

12÷30 V DC - 4 WIRES PROGRAMMABLE OUTPUT

- Range, 4mm to 8mm - flush, non flush
- Programmable outputs: NPN/PNP, NO or NC
- Cable or M12 quick connect models
- Nickel plated brass
- Operation LED
- 200 mA max output

TECHNICAL DATA

	FLUSH	NON FLUSH
NOMINAL SWITCHING DISTANCE (Sn)	4 mm	8 mm
NOMINAL VOLTAGE	12 ÷ 30 VDC (-15/+10%)	
RESIDUAL RIPPLE	≤ 10%	
HYSTERESIS	< 10%	
OUTPUT	NPN or PNP (may be selected)	
CONTACT	NO or NC (may be selected)	
MAX. CURRENT OUTPUT	200 mA	
ABSORPTION AT 24 VDC	< 1.2 mA	
VOLTAGE DROP (Sensor ON)	< 1,8 V (I = 100 mA)	
OPERATION LED	Yellow	
SWITCHING FREQUENCY	500 Hz	
START UP DELAY	≤ 50 ms	
REPEATABILITY	≤ 3%	
SHORT CIRCUIT PROTECTION	Present (self-resetting)	
ELECTRIC PROTECTIONS	Against polarity reversal - inductive loads	
TEMPERATURE LIMITS	- 25 ÷ +70 °C	
PROTECTION DEGREE	IP 67	
CABLE LENGTH	2 m	
CABLE SECTION	4 x 0.25 mm²	
HOUSING MATERIAL	Nickel-plated brass	
WEIGHT - Cable output -	110 g	
WEIGHT - M12 connector output -	60 g	

CE c UL US LISTED

WIRING DIAGRAMS

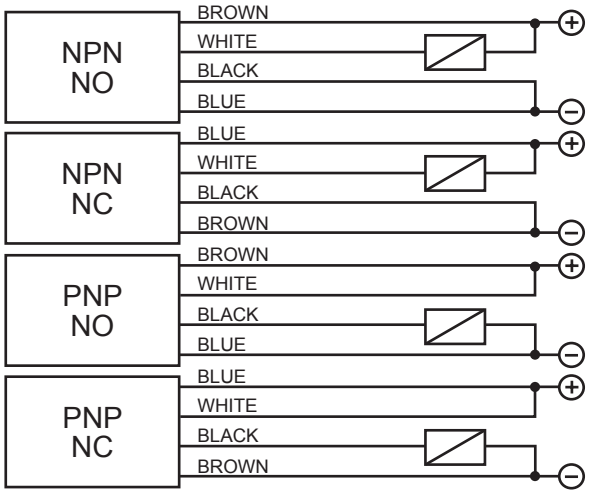

Thanks to the output status which is not paired with the rest of the circuit, the sensors of this kind of availability give enormous advantages, such as the possibility of obtaining the four output configurations (NPN-NO, NPN-NC, PNP-NO, PNP-NC,) on the same model.

CONNECTION WITH CONNECTOR M12

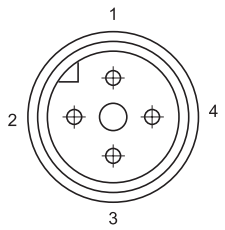

View of quadripole male connector

CONTACTS CONFIGURATION

Output	Contacts numbers			
	1	2	3	4
NPN NO	+	NO	–	–
NPN NC	–	NC	+	–
PNP NO	+	+	–	NO
PNP NC	–	+	+	NC

DIMENSIONS (mm)

CONFIGURATION WITH CABLE

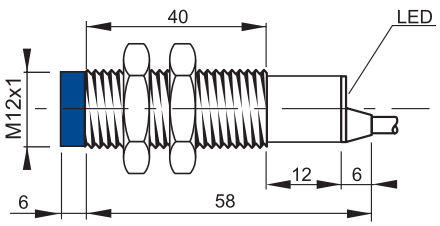

CONFIGURATION WITH CONNECTOR M12

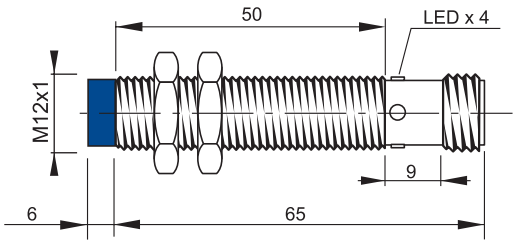

Note: the front part in blue refers to non flush models.

10÷30 V DC - 2 WIRES NO-NC PROGRAMMABLE OUTPUT

- Range, 2mm to 4mm - flush, non flush
- Cable or M12 quick connect models
- Nickel plated brass

WIRING DIAGRAMS

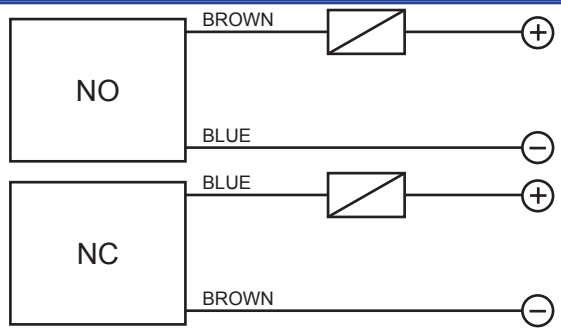

WARNING: The load can be indifferently connected in series to the blue wire or to the brown wire to simulate NPN or PNP functionning logic.

TECHNICAL DATA

	FLUSH	NON FLUSH
NOMINAL SWITCHING DISTANCE (Sn)	2 mm	4 mm
NOMINAL VOLTAGE	10 ÷ 30 VDC (-15 / +10%)	
RESIDUAL RIPPLE	≤ 10%	
HYSTERESIS	< 10%	
MAX. OUTPUT CURRENT	100 mA	
MIN. OUTPUT CURRENT	> 1,6 mA	
RESIDUAL CURRENT	< 1,6 mA	
VOLTAGE DROP	< 6,5 V (I = 100 mA)	
OPERATION LED	Yellow	
SWITCHING FREQUENCY	1000 Hz	
START UP DELAY	≤ 50 ms	
REPEATABILITY	≤ 3%	
SHORT CIRCUIT PROTECTION	Present (self-resetting)	
ELECTRIC PROTECTIONS	Against polarity reversal inductive loads	
TEMPERATURE LIMITS	- 25 ÷ +70 °C	
PROTECTION DEGREE	IP 67	
CABLE LENGTH	2 m	
CABLE SECTION	2 x 0.25 mm²	
HOUSING MATERIAL	Nickel-plated brass	
WEIGHT - Cable output -	110 g	
WEIGHT - M12 connector output -	60 g	

CONNECTION WITH CONNECTOR M12

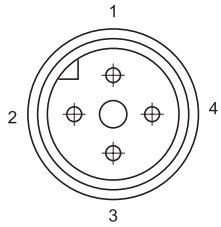

View of quadripole male connector

CONTACTS CONFIGURATION

Available	Contacts numbers			
	1	2	3	4
NO	+		–	
NC	–		+	

DIMENSIONS (mm)

CONFIGURATION WITH CABLE

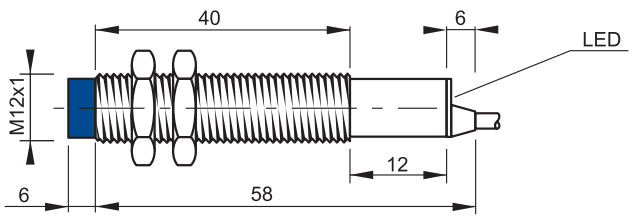

CONFIGURATION WITH CONNECTOR M12

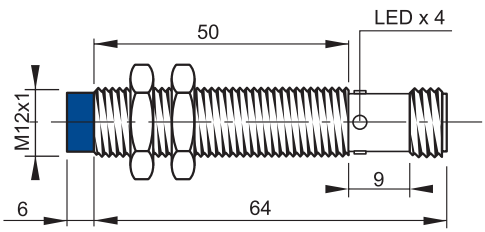

Note: the front part in blue refers to non flush models.

10÷30 V DC 2 WIRES NO-NC PROGRAMMABLE OUTPUT

- Range, 4mm to 8mm - flush, non flush
- M12 quick connect or integral cable
- Nickel plated brass

WIRING DIAGRAMS

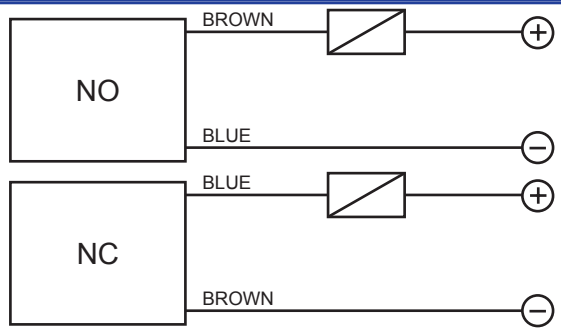

WARNING: The load can be indifferently connected in series to the blue wire or to the brown wire to simulate NPN or PNP functionning logic.

TECHNICAL DATA

	FLUSH	NON FLUSH
NOMINAL SWITCHING DISTANCE (Sn)	4 mm	8 mm
NOMINAL VOLTAGE	10 ÷ 30 VDC (-15 / +10%)	
RESIDUAL RIPPLE	≤ 10%	
HYSTERESIS	< 10%	
MAX. OUTPUT CURRENT	100 mA	
MIN. OUTPUT CURRENT	> 1,6 mA	
RESIDUAL CURRENT	< 1,6 mA	
VOLTAGE DROP	< 6,5 V (I = 100 mA)	
OPERATION LED	Yellow	
SWITCHING FREQUENCY	500 Hz	
START UP DELAY	≤ 50 ms	
REPEATABILITY	≤ 3%	
SHORT CIRCUIT PROTECTION	Present (self-resetting)	
ELECTRIC PROTECTIONS	Against polarity reversal inductive loads	
TEMPERATURE LIMITS	- 25 ÷ +70 °C	
PROTECTION DEGREE	IP 67	
CABLE LENGTH	2 m	
CABLE SECTION	2 x 0.25 mm²	
HOUSING MATERIAL	Nickel-plated brass	
WEIGHT - Cable output -	110 g	
WEIGHT - M12 connector output -	60 g	

CONNECTION WITH CONNECTOR M12

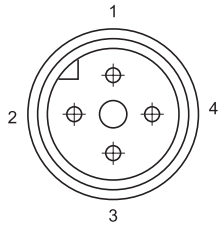

View of quadripole male connector

CONTACTS CONFIGURATION

Available	Contacts numbers			
	1	2	3	4
NO	+		–	
NC	–		+	

DIMENSIONS (mm)

CONFIGURATION WITH CABLE

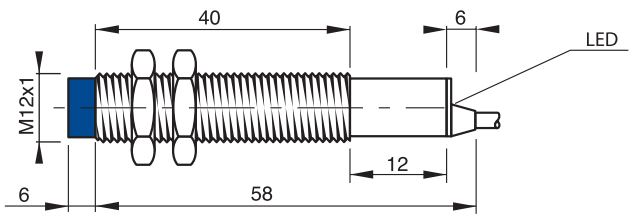

CONFIGURATION WITH CONNECTOR M12

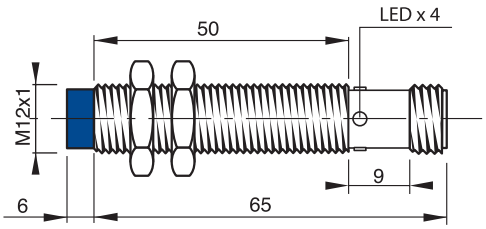

Note: the front part in blue refers to non flush models.

20÷250 V AC - 2 OR 3 WIRES NO OUTPUT

- Range, 2mm - flush
- Cable or M12 quick connect models
- Ultra low consumption < 0,7 mA
- Repeatability 5%
- 500mA max output

WIRING DIAGRAMS CABLE VERSION

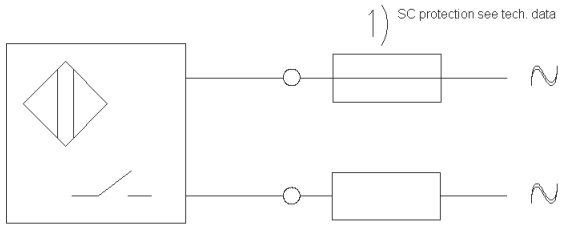

TECHNICAL DATA

	FLUSH
NOMINAL SWITCHING DISTANCE (Sn)	2 mm
NOMINAL VOLTAGE	20 ÷ 250 VAC
NET FREQUENCY	50 ÷ 60 Hz
HYSTERESIS	< 10%
MAX. OUTPUT CURRENT	500 mA
MIN. OUTPUT CURRENT	20 mA
MAX. INRUSH CURRENT (20 ms)	1.5 A
RESIDUAL CURRENT	< 0.7 mA
VOLTAGE DROP (Sensor ON)	< 5 V (I = 100 mA)
OPERATION LED	Yellow
SWITCHING FREQUENCY	25 Hz
START UP DELAY	≤ 300 ms
REPEATABILITY	5%
TEMPERATURE LIMITS	-25 ÷ +70 °C
PROTECTION DEGREE	IP 67
CABLE LENGTH	2 m
CABLE SECTION	2 x 0.25 mm²
HOUSING MATERIAL	Nickel-plated brass
WEIGHT - Cable output -	145 g
WEIGHT - M12 connector output -	95 g

CE c UL us LISTED

WIRING DIAGRAMS CONNECTOR VERSION

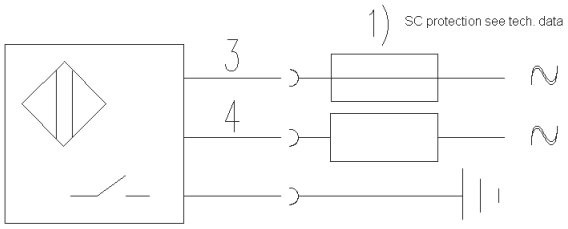

DIMENSIONS (mm)

CONFIGURATION WITH CABLE

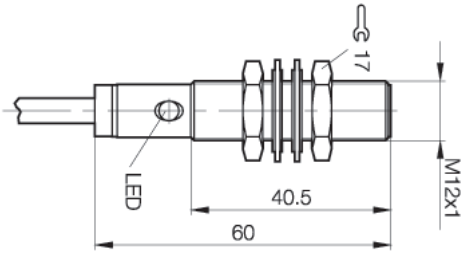

CONFIGURATION WITH CONNECTOR M12

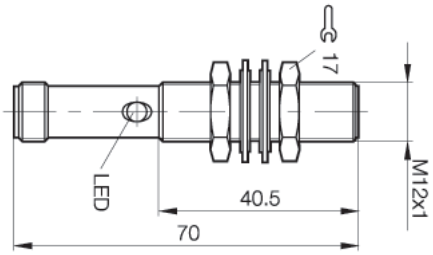

NAMUR

- 5÷24 V DC - 2 WIRES
- Range, 2mm to 4mm - flush, non flush
- Nickel plated brass
- Cable or M8 and M12 quick connect models

WIRING DIAGRAMS

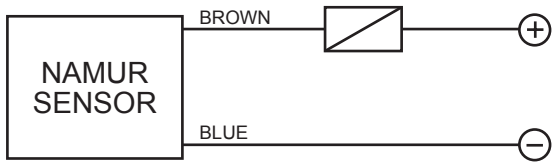

CONNECTION WITH CONNECTOR M12

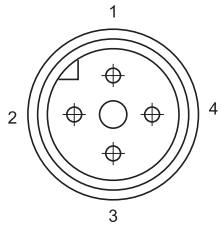

View of quadripole male connector

CONTACTS CONFIGURATION

Available	Contacts numbers			
	1	2	3	4
NAMUR	+		–	

TECHNICAL DATA

	FLUSH	NON FLUSH
NOMINAL SWITCHING DISTANCE (Sn)	2 mm	4 mm
NOMINAL VOLTAGE (Load resistence 1 K)	7.7 ÷ 9 V DC	
DC SUPPLY VOLTAGE	5 ÷ 24 V DC	
RESIDUAL RIPPLE	≤ 10%	
HYSTERESIS	≤ 10%	
OUTPUT CURRENT (Metal present)	≤ 1 mA	
OUTPUT CURRENT (Metal absent)	≤ 3 mA	
SWITCHING FREQUENCY	2000 Hz	
REPEATABILITY	≤ 3%	
TEMPERATURE LIMITS	-25 ÷ +60 °C	
PROTECTION DEGREE	IP 67	
DEVICE MARKING	II 3D IP67 T6X	
CABLE LENGTH	2 m	
CABLE SECTION	2 x 0.25 mm²	
HOUSING MATERIAL	Stainles - Steel	
WEIGHT - Cable output -	110 g	
WEIGHT - M12 connector output -	60 g	

CE c UL US LISTED

DIMENSIONS (mm)

CONFIGURATION WITH CABLE

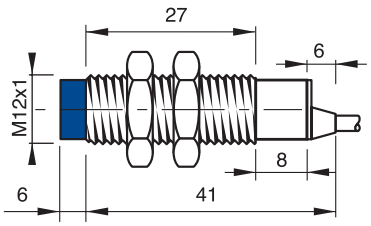

CONFIGURATION WITH CONNECTOR M12

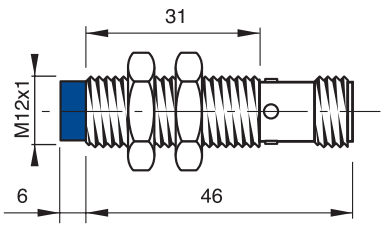

Note: the front part in blue refers to non flush models

10÷30 V DC - 3 WIRES NPN OR PNP OUTPUT

- Range, 3mm - flush
- Ambient temperature up to 150 °C
- FLUSH models
- Cable versions
- Stainless steel housing

WIRING DIAGRAMS

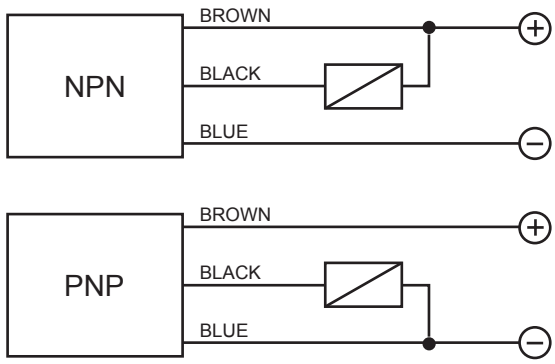

TECHNICAL DATA

	FLUSH
NOMINAL SWITCHING DISTANCE (Sn)	3 mm
NOMINAL VOLTAGE	10 ÷ 30 VDC (-15 / +10%)
RESIDUAL RIPPLE	≤ 15%
HYSTERESIS	< 15%
MAX. OUTPUT CURRENT	100 mA
RESIDUAL CURRENT	< 3 mA
VOLTAGE DROP (Sensor ON)	< 1.8 V
OPERATION LED	Not present
SWITCHING FREQUENCY	500 Hz
LOAD RESISTOR	100 KOhm
REPEATABILITY	≤ 3%
SHORT CIRCUIT PROTECTION	Present (self-resetting)
ELECTRIC PROTECTIONS	Against polarity reversal
TEMPERATURE LIMITS	- 25 ÷ +150 °C
PROTECTION DEGREE	IP 67
CABLE LENGTH	2 m
CABLE SECTION	3 x 0,25 mm^2
CABLE MATERIAL	Silicon
HOUSING MATERIAL	Stainless steel
WEIGHT - Cable output -	110 g

CE c UL US LISTED

DIMENSIONS (mm)

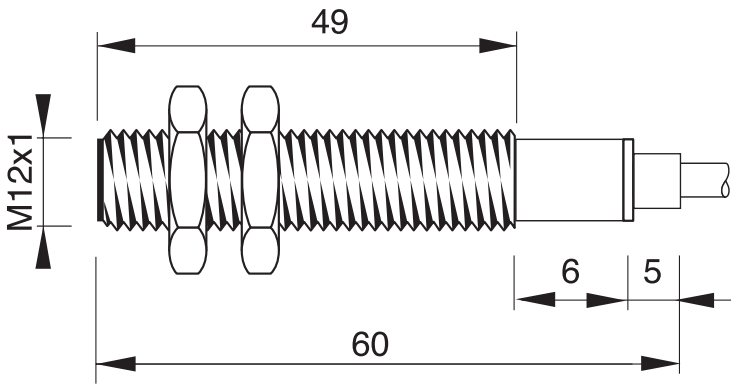

10÷30 VDC - 3 WIRES PNP OUTPUT

- Range, 2mm to 4mm - flush, non flush
- Stainless steel housing
- M12 quick connect models
- Operation LED

WIRING DIAGRAMS

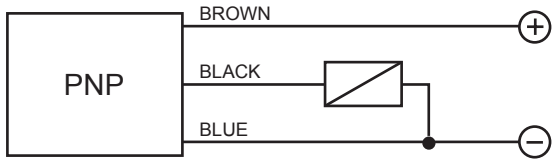

TECHNICAL DATA

	FLUSH	NON FLUSH
NOMINAL SWITCHING DISTANCE (Sn)	2 mm	4 mm
NOMINAL VOLTAGE	10 ÷ 30 VDC (-15 / +10%)	
RESIDUAL RIPPLE	≤ 10%	
HYSTERESIS	< 15%	
MAX. OUTPUT CURRENT	200 mA	
RESIDUAL CURRENT	< 10 mA	
VOLTAGE DROP (Sensor ON)	< 1.5 V (I = 100 mA)	
OPERATION LED	Present	
SWITCHING FREQUENCY	2000 Hz	1000 Hz
REPEATABILITY	≤ 1%	
SHORT CIRCUIT PROTECTION	Present (self-resetting)	
TEMPERATURE LIMITS	- 25 ÷ +70 °C	
PROTECTION DEGREE	IP 67	
ACTIVE FACE MATERIAL	ETFE	
HOUSING MATERIAL	Stainless Steel	
WEIGHT - M12 Connector output -	60 g	

CONNECTION WITH CONNECTOR M12

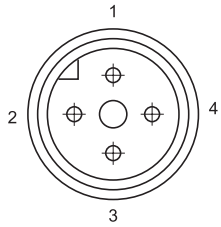

View of quadripole male connector

CONTACTS CONFIGURATION

Available	Contacts numbers			
	1	2	3	4
NO	+		–	NO

DIMENSIONS (mm)

FLUSH

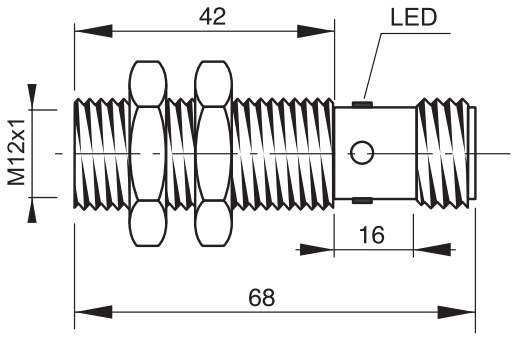

NON FLUSH

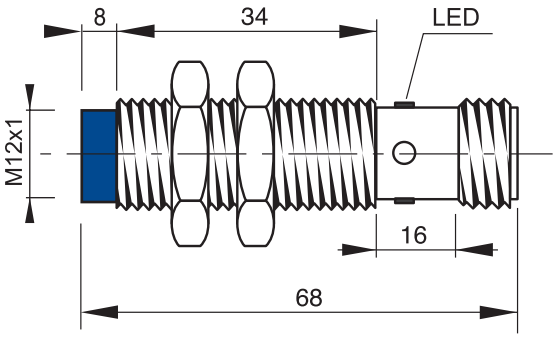

10÷30 VDC - 3 WIRES PNP OUTPUT

- Range, 2mm to 4mm - flush, non flush
- Stainless steel housing
- M12 quick connect models
- Operation LED

WIRING DIAGRAMS

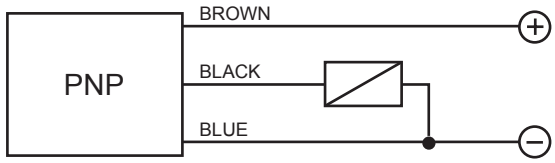

TECHNICAL DATA

	FLUSH	NON FLUSH
NOMINAL SWITCHING DISTANCE (Sn)	2 mm	4 mm
NOMINAL VOLTAGE	10 ÷ 30 VDC (-15 / +10%)	
RESIDUAL RIPPLE	≤ 10%	
HYSTERESIS	< 15%	
MAX. OUTPUT CURRENT	200 mA	
RESIDUAL CURRENT	< 10 mA	
VOLTAGE DROP (Sensor ON)	< 1.5 V (I = 100 mA)	
OPERATION LED	Present	
SWITCHING FREQUENCY	2000 Hz	1000 Hz
REPEATABILITY	≤ 1%	
SHORT CIRCUIT PROTECTION	Present (self-resetting)	
TEMPERATURE LIMITS	- 25 ÷ +70 °C	
PROTECTION DEGREE	IP 67	
ACTIVE FACE MATERIAL	Stainless Steel	
HOUSING MATERIAL	Stainless Steel	
WEIGHT - M12 Connector output -	60 g	

CE c UL us LISTED

CONNECTION WITH CONNECTOR M12

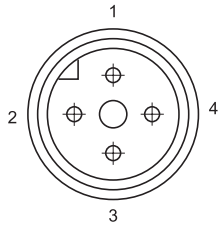

View of quadripole male connector

CONTACTS CONFIGURATION

Available	Contacts numbers			
	1	2	3	4
NO	+		–	NO

DIMENSIONS (mm)

FLUSH

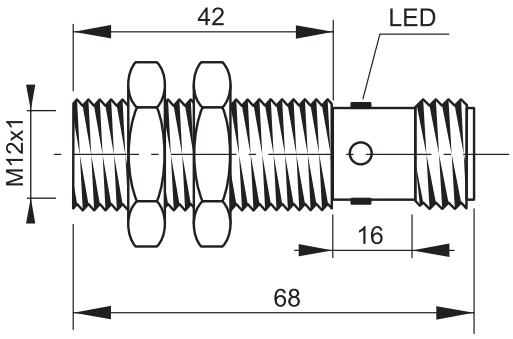

NON FLUSH

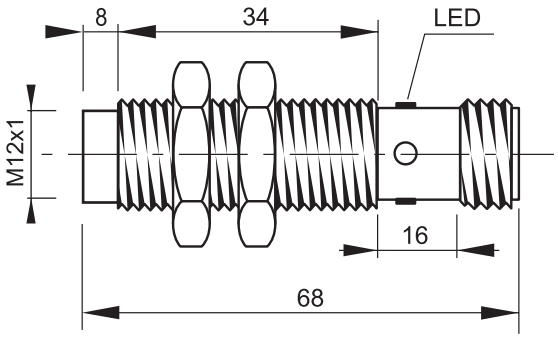

MODEL SELECTION AND ORDER INFORMATION

2MT CABLE

CODE	MODEL	RANGE	HOUSING	STEEL AISI316L	FLUSH	WIRES	NPN/PNP	NO/NC
95B061181	IS-12-A3-03	1X	STANDARD		•	3	NPN	NO
95B061211	IS-12-A4-03	1X	STANDARD		•	3	NPN	NC
95B061241	IS-12-A1-03	1X	STANDARD		•	3	PNP	NO
95B061271	IS-12-A2-03	1X	STANDARD		•	3	PNP	NC
95B061581	IS-12-C3-03	1X	STANDARD			3	NPN	NO
95B061611	IS-12-C4-03	1X	STANDARD			3	NPN	NC
95B061641	IS-12-C1-03	1X	STANDARD			3	PNP	NO
95B061671	IS-12-C2-03	1X	STANDARD			3	PNP	NC
95B061981	IS-12-B3-03	1X	SHORT		•	3	NPN	NO
95B062011	IS-12-B4-03	1X	SHORT		•	3	NPN	NC
95B062041	IS-12-B1-03	1X	SHORT		•	3	PNP	NO
95B062071	IS-12-B2-03	1X	SHORT		•	3	PNP	NC
95B062381	IS-12-D3-03	1X	SHORT			3	NPN	NO
95B062411	IS-12-D4-03	1X	SHORT			3	NPN	NC
95B062441	IS-12-D1-03	1X	SHORT			3	PNP	NO
95B062471	IS-12-D2-03	1X	SHORT			3	PNP	NC
95B062661	IS-12-G6-03	2X	SHORT		•	4	NPN	NO-NC
95B062681	IS-12-G5-03	2X	SHORT		•	4	PNP	NO-NC
95B062741	IS-12-H6-03	2X	SHORT			4	NPN	NO-NC
95B062761	IS-12-H5-03	2X	SHORT			4	PNP	NO-NC
95B063321	IS-12-G3-03	2X	SHORT		•	3	NPN	NO
95B063341	IS-12-G4-03	2X	SHORT		•	3	NPN	NC
95B063361	IS-12-G1-03	2X	SHORT		•	3	PNP	NO
95B063381	IS-12-G2-03	2X	SHORT		•	3	PNP	NC
95B063401	IS-12-H3-03	2X	SHORT			3	NPN	NO
95B063421	IS-12-H4-03	2X	SHORT			3	NPN	NC
95B063441	IS-12-H1-03	2X	SHORT			3	PNP	NO
95B063461	IS-12-H2-03	2X	SHORT			3	PNP	NC
95B063801	IS-12-G9-03	2X	SHORT		•	2		PROG
95B063841	IS-12-G0-03	2X	SHORT		•	4	PROG	PROG
95B064030	IS-12-A0-03	1X	STANDARD		•	4	PROG	PROG
95B064040	IS-12-B0-03	1X	SHORT			4	PROG	PROG
95B064050	IS-12-H0-03	2X	SHORT			4	PROG	PROG
95B064100	IS-12-A9-03	1X	STANDARD		•	2		PROG
95B064110	IS-12-B9-03	1X	SHORT			2		PROG
95B064120	IS-12-H9-03	2X	SHORT			2		PROG
95B064160	IS-12-A20-03	1X	STANDARD		•	2		
95B064170	IS-12-C20-03	1X	STANDARD			2		
95B060680	IS-12-A15-03	1X	STANDARD		•	2		NO

MODEL SELECTION AND ORDER INFORMATION

M12 CONNECTOR

CODE	MODEL	RANGE	HOUSING	STEEL AISI316L	FLUSH	WIRES	NPN/PNP	NO/NC
95B060000	IS-12-O1-S2	2X	SHORT	•	•	3	PNP	
95B060010	IS-12-O2-S2	2X	SHORT	•	•	3	PNP	
95B060020	IS-12-O3-S2	2X	SHORT	•	•	3	NPN	
95B060030	IS-12-O4-S2	2X	SHORT	•	•	3	NPN	
95B060040	IS-12-P1-S2	2X	SHORT	•		3	PNP	
95B060050	IS-12-P2-S2	2X	SHORT	•		3	PNP	
95B060060	IS-12-P3-S2	2X	SHORT	•		3	NPN	
95B060070	IS-12-P4-S2	2X	SHORT	•		3	NPN	
95B060240	IS-12-M1-S2	1X	SHORT	•	•	3	PNP	
95B060250	IS-12-M2-S2	1X	SHORT	•	•	3	PNP	
95B060260	IS-12-M3-S2	1X	SHORT	•	•	3	NPN	
95B060270	IS-12-M4-S2	1X	SHORT	•	•	3	NPN	
95B060280	IS-12-N1-S2	1X	SHORT	•		3	PNP	
95B060290	IS-12-N2-S2	1X	SHORT	•		3	PNP	
95B060300	IS-12-N3-S2	1X	SHORT	•		3	NPN	
95B060310	IS-12-N4-S2	1X	SHORT	•		3	NPN	
95B061191	IS-12-A3-S2	1X	STANDARD		•	3	NPN	
95B061221	IS-12-A4-S2	1X	STANDARD		•	3	NPN	
95B061251	IS-12-A1-S2	1X	STANDARD		•	3	PNP	
95B061281	IS-12-A2-S2	1X	STANDARD		•	3	PNP	
95B061591	IS-12-C3-S2	1X	STANDARD			3	NPN	
95B061621	IS-12-C4-S2	1X	STANDARD			3	NPN	
95B061651	IS-12-C1-S2	1X	STANDARD			3	PNP	
95B061681	IS-12-C2-S2	1X	STANDARD			3	PNP	
95B061991	IS-12-B3-S2	1X	SHORT		•	3	NPN	
95B062021	IS-12-B4-S2	1X	SHORT		•	3	NPN	
95B062051	IS-12-B1-S2	1X	SHORT		•	3	PNP	
95B062081	IS-12-B2-S2	1X	SHORT		•	3	PNP	
95B062391	IS-12-D3-S2	1X	SHORT			3	NPN	
95B062421	IS-12-D4-S2	1X	SHORT			3	NPN	
95B062451	IS-12-D1-S2	1X	SHORT			3	PNP	
95B062481	IS-12-D2-S2	1X	SHORT			3	PNP	
95B062671	IS-12-G6-S2	2X	SHORT		•	4	NPN	
95B062691	IS-12-G5-S2	2X	SHORT		•	4	PNP	
95B062751	IS-12-H6-S2	2X	SHORT			4	NPN	
95B062771	IS-12-H5-S2	2X	SHORT			4	PNP	
95B063331	IS-12-G3-S2	2X	SHORT		•	3	NPN	
95B063351	IS-12-G4-S2	2X	SHORT		•	3	NPN	
95B063371	IS-12-G1-S2	2X	SHORT		•	3	PNP	
95B063391	IS-12-G2-S2	2X	SHORT		•	3	PNP	
95B063411	IS-12-H3-S2	2X	SHORT			3	NPN	
95B063431	IS-12-H4-S2	2X	SHORT			3	NPN	
95B063451	IS-12-H1-S2	2X	SHORT			3	PNP	
95B063471	IS-12-H2-S2	2X	SHORT			3	PNP	
95B063931	IS-12-A9-S2	1X	STANDARD		•	2		PROG
95B064060	IS-12-A0-S2	1X	STANDARD		•	4	PROG	PROG
95B064070	IS-12-G0-S2	2X	SHORT		•	4	PROG	PROG
95B064080	IS-12-B0-S2	1X	SHORT			4	PROG	PROG
95B064090	IS-12-H0-S2	2X	SHORT			4	PROG	PROG
95B064130	IS-12-G9-S2	2X	SHORT		•	2		PROG
95B064140	IS-12-B9-S2	1X	SHORT			2		PROG
95B064150	IS-12-H9-S2	2X	SHORT			2		PROG
95B064180	IS-12-A20-S2	1X	STANDARD		•	2		
95B064190	IS-12-C20-S2	1X	STANDARD			2		
95B060690	IS-12-A15-S2	1X	STANDARD		•	2		NO
95B065340	IS-12-I1-S2	1X	STANDARD	•		2	PNP	NO
95B063871	IS-12-L1-S2	1X	STANDARD	•	•	2	PNP	NO
95B065360	IS-F12-S1-S2	1X	STANDARD			2	PNP	NO
95B065370	IS-F12-T1-S2	1X	STANDARD		•	2	PNP	NO

ACCESSORY SELECTION AND ORDER INFORMATION

CODE	MODEL	DESCRIPTION
95ACC3340	ST1218	ST1218 Brackets M12/M18 sensors

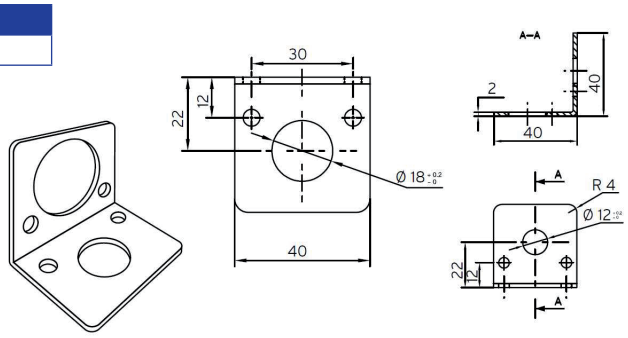

Material: stainless steel.

Weight 40 g

MODEL DESCRIPTION

IS - 04 - A 1 - 03

DIAMETER
04 = 4mm
05 = 5mm
65 = 6,5mm
08 = 8mm
12 = 12mm
18 = 18mm
30 = 30mm
40 = 40x40mm SQUARE
80 = 80x80mm SQUARE
88 = 8x8mm SQUARE

CONSTRUCTION
A= flush standard housing
B= flush short housing
BB= flush extra short housing
C= non flush standard housing
D= non flush short housing
E= flush standard housing double range
F= non flush standard housing double range
G= flush short housing double range
GG= flush extra short housing double range
H= non flush short housing double range
I= flush standard housing metal face
L= non flush standard housing metal face
M= flush short housing steel
N= non flush short housing steel
O= flush short housing steel double range
P= non flush short housing steel double range
Q= flush 8x8mm square housing
R= flush 8x8mm square housing double range
S= flush standard housing steel
T= non flush standard housing steel
U= flush standard housing steel double range
V= non flush standard housing steel double range
W= flush 40x40mm square housing
X= flush 40x40mm short square housing
Y= non flush 40x40mm square housing
Z= non flush 40x40mm short square housing

OUTPUT
1 = 10-30 Vdc PNP NO
2 = 10-30 Vdc PNP NC
3 = 10-30 Vdc NPN NO
4 = 10-30 Vdc NPN NC
5 = 10-30 Vdc PNP NO-NC
6 = 10-30 Vdc NPN NO-NC
7 = 24-230Vac – 2 wires NO
8 = 24-230Vac – 2 wires NC
9 = 10-30 Vdc - 2 wires NO-NC
0 = 10-30 Vdc - 4 wires
11 = Analog 4-20mA
12 = Analog 0-10V
13 = Analog 0-10V/4-20mA
14 = Analog 0-5V/1-5mA
15 = 20-250Vac/Vdc-2 and 3 wires NO
20 = NAMUR

CONNECTION
02 = Cable 500mm
03 = Cable 2mt
04 = Cable 700mm
S1 = M8 connector
S2 = M12 connector
S3 = terminal block*
S4 = unf 1/2”

*
only for square housing version

Note: Not all code combinations are available. Please refer to alphabetical model index for the list of available models.

The company endeavours to continuously improve and renew its products; for this reason the technical data and contents of this catalogue may undergo variations without prior notice. For correct installation and use, the company can guarantee only the data indicated in the instruction manual supplied with the products.

M18 SERIES

There are millions of inductive sensors deployed in almost every area of factory automation. They detect metal objects contactless and are distinguished by a long operating life and extreme robustness. The Datalogic Automation inductive family provides the right solution to market requirements, offering a wide range of cylindrical and rectangular standard sensors with one or two set switching distances, available also with two, three or four wires connection models, short and standard housing and cable or connector version. Stainless steel version for both harsh environments or for FOOD applications.

Diversey ECOLAB

HIGHLIGHTS

- Wide range: suitable practically for all the industrial applications
- Stainless steel versions: suitable for food applications
- 1X and 2 X operating distances: high detection reliability and precise reading
- 2, 3 or 4 wire connection: flexible connection system to meet customer applications

APPLICATIONS

Automatic warehouse

Automotive

Trasportation lines

Packaging lines

10÷30 V DC - 3 WIRES NPN OR PNP OUTPUT

- Range, 5mm to 8mm - flush, non flush
- Short housing models
- Cable or M12 quick connect models
- Operation LED
- Stainless steel housing

WIRING DIAGRAMS

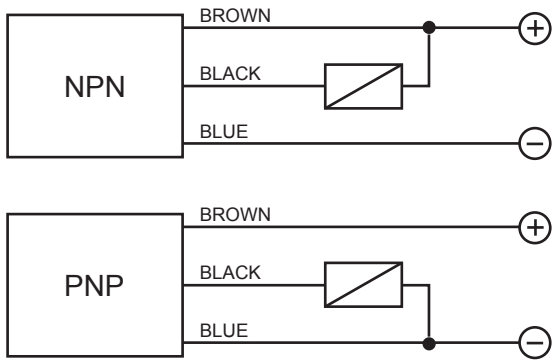

TECHNICAL DATA

	FLUSH	NON FLUSH
NOMINAL SWITCHING DISTANCE (Sn)	5 mm	8 mm
NOMINAL VOLTAGE	10 ÷ 30 VDC (-15 / +10%)	
RESIDUAL RIPPLE	≤ 10%	
HYSTERESIS	< 10%	
MAX. OUTPUT CURRENT	200 mA	
RESIDUAL CURRENT	< 10 mA	
VOLTAGE DROP (Sensor ON)	< 1.8 V (I = 100 mA)	
OPERATION LED	Yellow	
SWITCHING FREQUENCY	1000 Hz	
START UP DELAY	≤ 50 ms	
REPEATABILITY	≤ 3%	
SHORT CIRCUIT PROTECTION	Present (self-resetting)	
ELECTRIC PROTECTIONS	Against polarity reversal inductive loads	
TEMPERATURE LIMITS	- 25 ÷ +60 °C	
PROTECTION DEGREE	IP 67	
CABLE LENGTH	2 m	
CABLE SECTION	3 x 0,25 mm^2	
HOUSING MATERIAL	Nickel-plated brass Stainless Steel	
WEIGHT - Cable output -	145 g	
WEIGHT - M12 connector output -	95 g	

CONNECTION WITH CONNECTOR M12

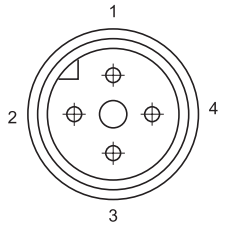

View of quadripole male connector

CONTACTS CONFIGURATION

Available	Contacts numbers			
	1	2	3	4
(NO or NC)	+		–	NO/NC

DIMENSIONS (mm)

CONFIGURATION WITH CABLE

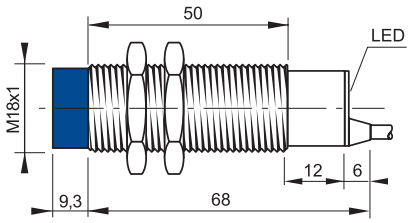

SHORT HOUSING

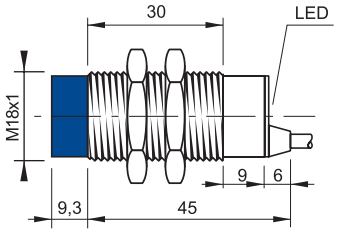

CONFIGURATION WITH CONNECTOR M12

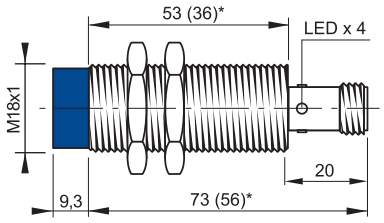

(*) The dimensions into brackets refer to short housing models
Note: the front part in blue refers to non flush models

10÷30 V DC - 3 WIRES NPN OR PNP OUTPUT

- Range, 8mm to 14mm - flush, non flush
- Short housing models
- Cable or M12 quick connect models
- Operation LED

WIRING DIAGRAMS

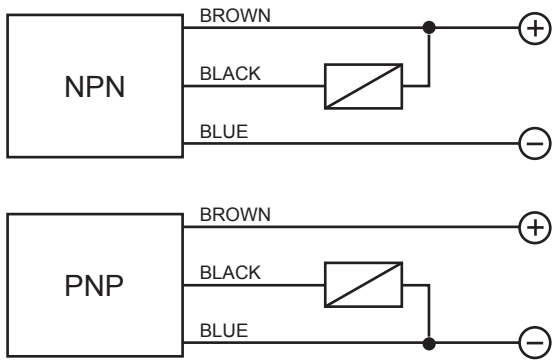

TECHNICAL DATA

	FLUSH	NON FLUSH
NOMINAL SWITCHING DISTANCE (Sn)	8 mm	14 mm
NOMINAL VOLTAGE	10 ÷ 30 VDC (-15 / +10%)	
RESIDUAL RIPPLE	≤ 10%	
HYSTERESIS	< 10%	
MAX. OUTPUT CURRENT	200 mA	
RESIDUAL CURRENT	< 10 mA	
VOLTAGE DROP (Sensor ON)	< 1.2 V (I = 100 mA)	
OPERATION LED	Yellow	
SWITCHING FREQUENCY	400 Hz	
START UP DELAY	≤ 75 ms	
REPEATABILITY	≤ 3%	
SHORT CIRCUIT PROTECTION	Present (self-resetting)	
ELECTRIC PROTECTIONS	Against polarity reversal inductive loads	
TEMPERATURE LIMITS	- 25 ÷ +70 °C	
PROTECTION DEGREE	IP 67	
CABLE LENGTH	2 m	
CABLE SECTION	3 x 0,25 mm^2	
HOUSING MATERIAL	Nickel-plated brass	
WEIGHT - Cable output -	145 g	
WEIGHT - M12 connector output -	95 g	

CONNECTION WITH CONNECTOR M12

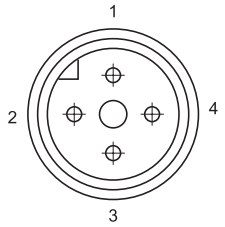

View of quadripole male connector

CONTACTS CONFIGURATION

Available	Contacts numbers			
	1	2	3	4
(NO or NC)	+		–	NO/NC

DIMENSIONS (mm)

CONFIGURATION WITH CABLE

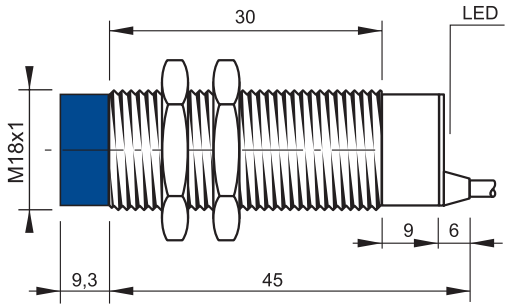

CONFIGURATION WITH CONNECTOR M12

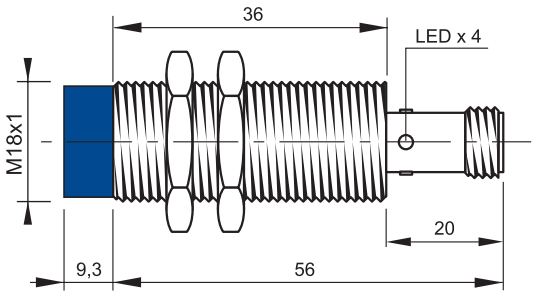

Note: the front part in blue refers to non flush models

10÷30 V DC - 4 WIRES NPN OR PNP OUTPUT

- Range, 8mm to 14mm - flush, non flush
- Short housing models
- 200mA NPN or PNP
- Operation LED
- Cable or M12 quick connect models

WIRING DIAGRAMS

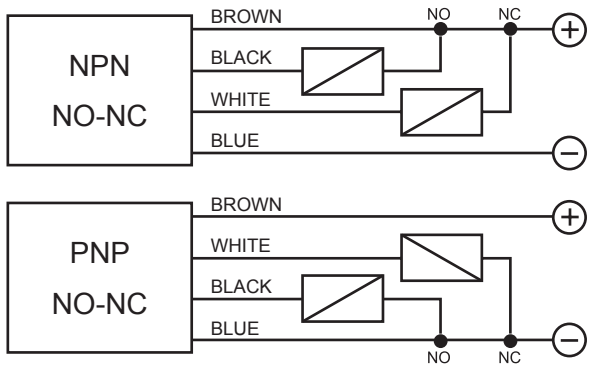

TECHNICAL DATA

	FLUSH	NON FLUSH
NOMINAL SWITCHING DISTANCE (Sn)	8 mm	14 mm
NOMINAL VOLTAGE	10 ÷ 30 VDC (-15 / +10%)	
RESIDUAL RIPPLE	≤ 10%	
HYSTERESIS	< 10%	
MAX. OUTPUT CURRENT	200 mA	
RESIDUAL CURRENT	< 10 mA	
VOLTAGE DROP (Sensor ON)	< 1.2 V (I = 100 mA)	
OPERATION LED	Yellow	
SWITCHING FREQUENCY	400 Hz	
START UP DELAY	≤ 75 ms	
REPEATABILITY	≤ 3%	
SHORT CIRCUIT PROTECTION	Present (self-resetting)	
ELECTRIC PROTECTIONS	Against polarity reversal inductive loads	
TEMPERATURE LIMITS	- 25 ÷ +70 °C	
PROTECTION DEGREE	IP 67	
CABLE LENGTH	2 m	
CABLE SECTION	3 x 0,25 mm^2	
HOUSING MATERIAL	Nickel-plated brass	
WEIGHT - Cable output -	145 g	
WEIGHT - M12 connector output -	95 g	

CONNECTION WITH CONNECTOR M12

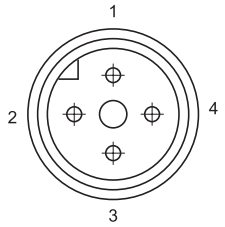

View of quadripole male connector

CONTACTS CONFIGURATION

Available	Contacts numbers			
	1	2	3	4
(NO + NC)	+	NC	–	NO

DIMENSIONS (mm)

CONFIGURATION WITH CABLE

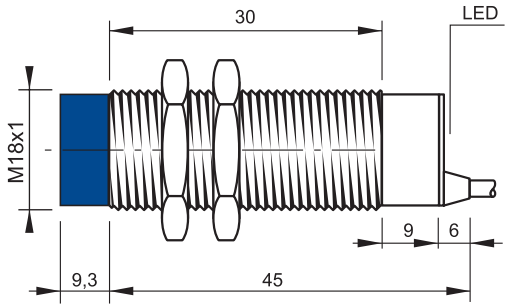

CONFIGURATION WITH CONNECTOR M12

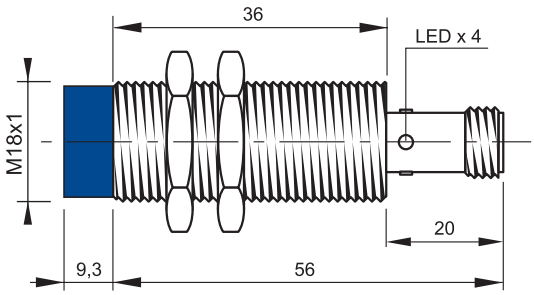

Note: the front part in blue refers to non flush models

12÷30 V DC - 4 WIRES PROGRAMMABLE OUTPUT

- Range, 5mm to 8mm - flush, non flush
- Programmable outputs: NPN/PNP, NO or NC
- Cable or M12 quick connect models
- Nickel plated brass

TECHNICAL DATA

	FLUSH	NON FLUSH
NOMINAL SWITCHING DISTANCE (Sn)	5 mm	8 mm
NOMINAL VOLTAGE	12 ÷ 30 VDC (-15/+10%)	
RESIDUAL RIPPLE	≤ 10%	
HYSTERESIS	< 10%	
OUTPUT	NPN or PNP (may be selected)	
CONTACT	NO or NC (may be selected)	
MAX. CURRENT OUTPUT	200 mA	
ABSORPTION AT 24 VDC	< 1.2 mA	
VOLTAGE DROP (Sensor ON)	< 1,8 V (I = 100 mA)	
OPERATION LED	Yellow	
SWITCHING FREQUENCY	1000 Hz	
START UP DELAY	≤ 50 ms	
REPEATABILITY	≤ 3%	
SHORT CIRCUIT PROTECTION	Present (self-resetting)	
ELECTRIC PROTECTIONS	Against polarity reversal - inductive loads	
TEMPERATURE LIMITS	- 25 ÷ +70 °C	
PROTECTION DEGREE	IP 67	
CABLE LENGTH	2 m	
CABLE SECTION	4 x 0.25 mm²	
HOUSING MATERIAL	Nickel-plated brass	
WEIGHT - Cable output -	145 g	
WEIGHT - M12 connector output -	95 g	

CE c UL US LISTED

WIRING DIAGRAMS

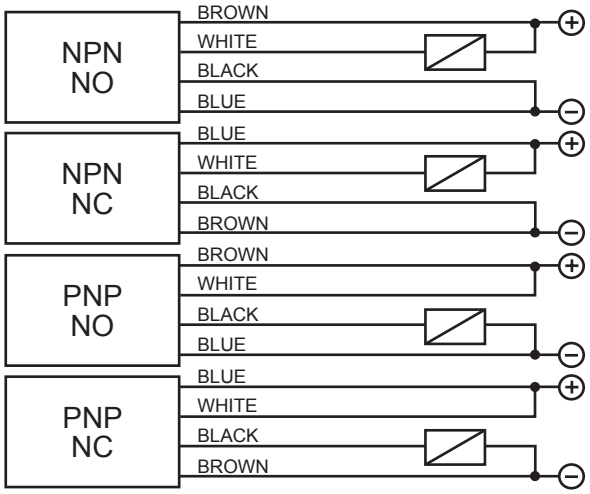

Thanks to the output status which is not paired with the rest of the circuit, the sensors of this kind of availability give enormous advantages, such as the possibility of obtaining the four output configurations (NPN-NO, NPN-NC, PNP-NO, PNP-NC,) on the same model.

CONNECTION WITH CONNECTOR M12

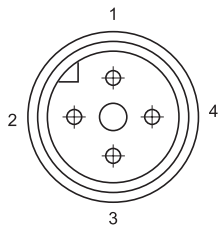

View of quadripole male connector

CONTACTS CONFIGURATION

Output	Contacts numbers			
	1	2	3	4
NPN NO	+	NO	–	–
NPN NC	–	NC	+	–
PNP NO	+	+	–	NO
PNP NC	–	+	+	NC

DIMENSIONS (mm)

CONFIGURATION WITH CABLE

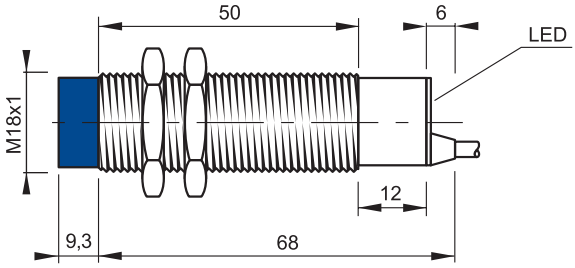

CONFIGURATION WITH CONNECTOR M12

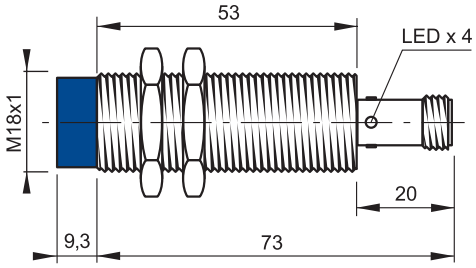

Note: the front part in blue refers to non flush models

12÷30 V DC - 4 WIRES PROGRAMMABLE OUTPUT

- Range, 8mm to 14mm - flush, non flush
- Programmable outputs: NPN/PNP, NO or NC
- Cable or M12 quick connect models
- Nickel plated brass
- Operation LED
- 200 mA max output

WIRING DIAGRAMS

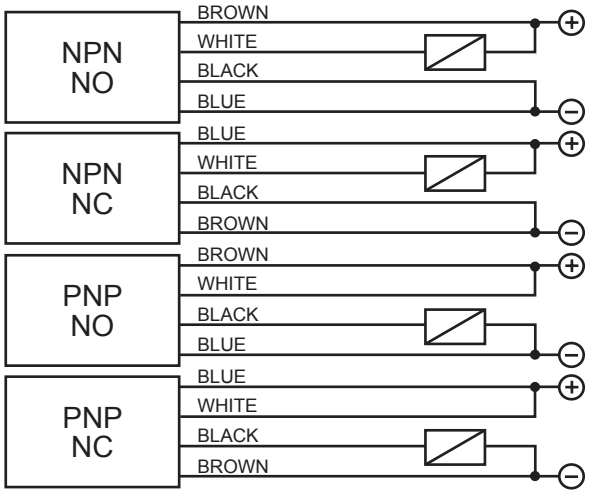

Thanks to the output status which is not paired with the rest of the circuit, the sensors of this kind of availability give enormous advantages, such as the possibility of obtaining the four output configurations (NPN-NO, NPN-NC, PNP-NO, PNP-NC,) on the same model.

TECHNICAL DATA

	FLUSH	NON FLUSH
NOMINAL SWITCHING DISTANCE (Sn)	8 mm	14 mm
NOMINAL VOLTAGE	12 ÷ 30 VDC (-15/+10%)	
RESIDUAL RIPPLE	≤ 10%	
HYSTERESIS	< 10%	
OUTPUT	NPN or PNP (may be selected)	
CONTACT	NO or NC (may be selected)	
MAX. CURRENT OUTPUT	200 mA	
ABSORPTION AT 24 VDC	< 1.2 mA	
VOLTAGE DROP (Sensor ON)	< 1,8 V (I = 100 mA)	
OPERATION LED	Yellow	
SWITCHING FREQUENCY	400 Hz	
START UP DELAY	≤ 50 ms	
REPEATABILITY	≤ 3%	
SHORT CIRCUIT PROTECTION	Present (self-resetting)	
ELECTRIC PROTECTIONS	Against polarity reversal - inductive loads	
TEMPERATURE LIMITS	- 25 ÷ +70 °C	
PROTECTION DEGREE	IP 67	
CABLE LENGTH	2 m	
CABLE SECTION	4 x 0.25 mm²	
HOUSING MATERIAL	Nickel-plated brass	
WEIGHT - Cable output -	145 g	
WEIGHT - M12 connector output -	95 g	

CONNECTION WITH CONNECTOR M12

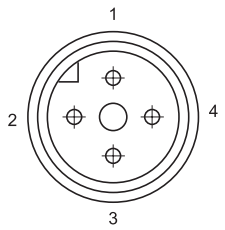

View of quadripole male connector

CONTACTS CONFIGURATION

Output	Contacts numbers			
	1	2	3	4
NPN NO	+	NO	–	–
NPN NC	–	NC	+	–
PNP NO	+	+	–	NO
PNP NC	–	+	+	NC

DIMENSIONS (mm)

CONFIGURATION WITH CABLE

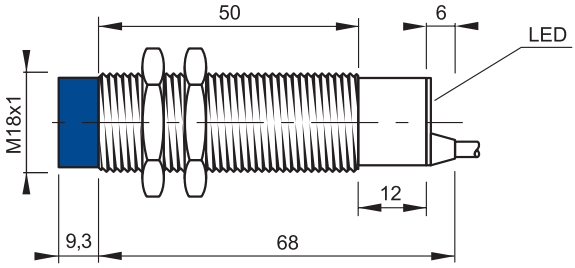

CONFIGURATION WITH CONNECTOR M12

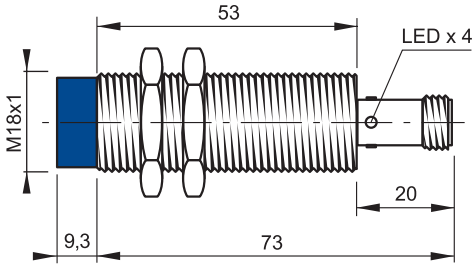

Note: the front part in blue refers to non flush models

10÷30 VDC - 2 WIRES NO-NC PROGRAMMABLE OUTPUT

- Range, 5mm to 8mm - flush, non flush
- Cable or M12 quick connect models
- Nickel plated brass

WIRING DIAGRAMS

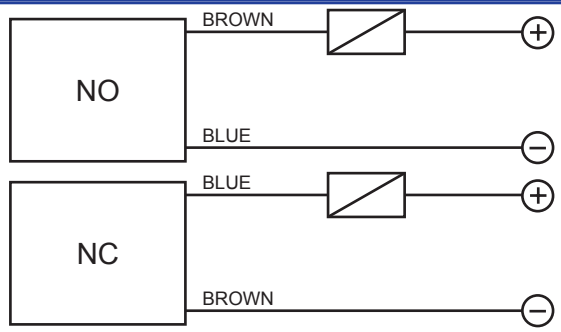

WARNING: The load can be indifferently connected in series to the blue wire or to the brown wire to simulate NPN or PNP functionning logic.

TECHNICAL DATA

	FLUSH	NON FLUSH
NOMINAL SWITCHING DISTANCE (Sn)	4 mm	8 mm
NOMINAL VOLTAGE	10 ÷ 30 VDC (-15 / +10%)	
RESIDUAL RIPPLE	≤ 10%	
HYSTERESIS	< 10%	
MAX. OUTPUT CURRENT	100 mA	
MIN. OUTPUT CURRENT	> 1,6 mA	
RESIDUAL CURRENT	< 1,6 mA	
VOLTAGE DROP	< 6,5 V (I = 100 mA)	
OPERATION LED	Yellow	
SWITCHING FREQUENCY	1000 Hz	
START UP DELAY	≤£ 50 ms	
REPEATABILITY	≤ 3%	
SHORT CIRCUIT PROTECTION	Present (self-resetting)	
ELECTRIC PROTECTIONS	Against polarity reversal inductive loads	
TEMPERATURE LIMITS	- 25 ÷ +70 °C	
PROTECTION DEGREE	IP 67	
CABLE LENGTH	2 m	
CABLE SECTION	2 x 0.25 mm²	
HOUSING MATERIAL	Nickel-plated brass	
WEIGHT - Cable output -	145 g	
WEIGHT - M12 connector output -	95 g	

CONNECTION WITH CONNECTOR M12

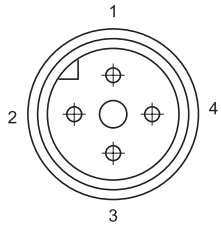

View of quadripole male connector

CONTACTS CONFIGURATION

Available	Contacts numbers			
	1	2	3	4
NO	+		–	
NC	–		+	

DIMENSIONS (mm)

CONFIGURATION WITH CABLE

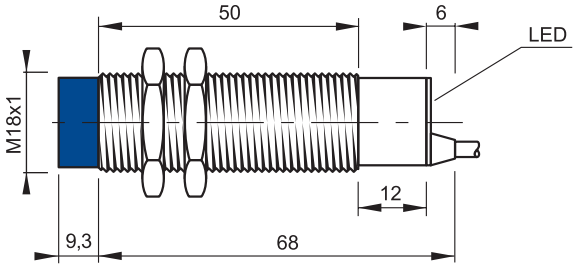

CONFIGURATION WITH CONNECTOR M12

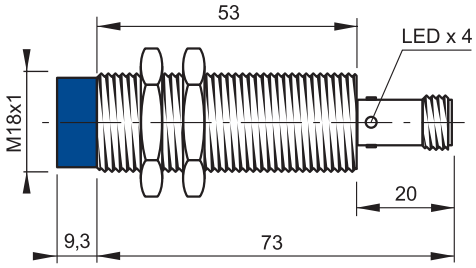

Note: the front part in blue refers to non flush models.

10÷30 V DC - 2 WIRES NO-NC PROGRAMABLE OUTPUT

- Range, 8mm to 14mm - flush, non flush
- Cable or M12 quick connect models
- Nickel plated brass

WIRING DIAGRAMS

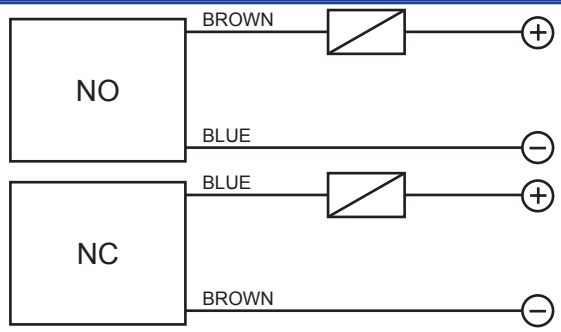

WARNING: The load can be indifferently connected in series to the blue wire or to the brown wire to simulate NPN or PNP functionning logic.

TECHNICAL DATA

	FLUSH	NON FLUSH
NOMINAL SWITCHING DISTANCE (Sn)	8 mm	14 mm
NOMINAL VOLTAGE	10 ÷ 30 VDC (-15 / +10%)	
RESIDUAL RIPPLE	≤ 10%	
HYSTERESIS	< 10%	
MAX. OUTPUT CURRENT	100 mA	
MIN. OUTPUT CURRENT	> 1,6 mA	
RESIDUAL CURRENT	< 1,6 mA	
VOLTAGE DROP	< 6,5 V (I = 100 mA)	
OPERATION LED	Yellow	
SWITCHING FREQUENCY	400 Hz	
START UP DELAY	≤ 50 ms	
REPEATABILITY	≤ 3%	
SHORT CIRCUIT PROTECTION	Present (self-resetting)	
ELECTRIC PROTECTIONS	Against polarity reversal inductive loads	
TEMPERATURE LIMITS	- 25 ÷ +70 °C	
PROTECTION DEGREE	IP 67	
CABLE LENGTH	2 m	
CABLE SECTION	2 x 0.25 mm²	
HOUSING MATERIAL	Nickel-plated brass	
WEIGHT - Cable output -	145 g	
WEIGHT - M12 connector output -	95 g	

CONNECTION WITH CONNECTOR M12

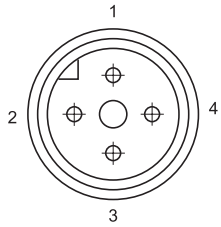

View of quadripole male connector

CONTACTS CONFIGURATION

Available	Contacts numbers			
	1	2	3	4
NO	+		–	
NC	–		+	

DIMENSIONS (mm)

CONFIGURATION WITH CABLE

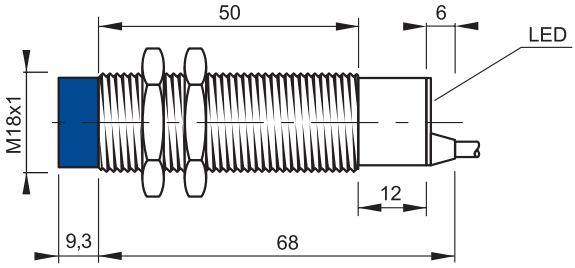

CONFIGURATION WITH CONNECTOR M12

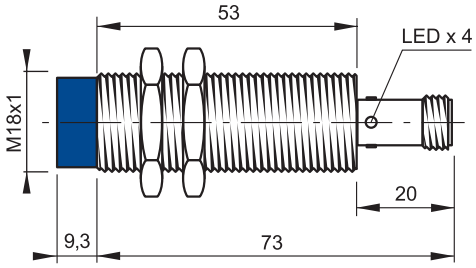

Note: the front part in blue refers to non flush models.

20÷250 V AC - 2 OR 3 WIRES NO OUTPUT

- Range, 5mm - flush
- Cable or M12 quick connect models
- Ultra low consumption < 0,7 mA
- Repeatability 5%
- 500mA max output

WIRING DIAGRAMS CABLE VERSION

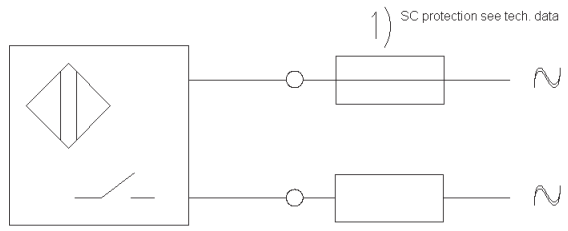

TECHNICAL DATA

	FLUSH
NOMINAL SWITCHING DISTANCE (Sn)	2 mm
NOMINAL VOLTAGE	20 ÷ 250 VAC
NET FREQUENCY	50 ÷ 60 Hz
HYSTERESIS	< 10%
MAX. OUTPUT CURRENT	500 mA
MIN. OUTPUT CURRENT	20 mA
MAX. INRUSH CURRENT (20 ms)	1.5 A
RESIDUAL CURRENT	< 0.7 mA
VOLTAGE DROP (Sensor ON)	< 5 V (I = 100 mA)
OPERATION LED	Yellow
SWITCHING FREQUENCY	25 Hz
START UP DELAY	≤ 300 ms
REPEATABILITY	5%
TEMPERATURE LIMITS	-25 ÷ +70 °C
PROTECTION DEGREE	IP 67
CABLE LENGTH	2 m
CABLE SECTION	2 x 0.25 mm^2
HOUSING MATERIAL	Nickel-plated brass
WEIGHT - Cable output -	145 g
WEIGHT - M12 connector output -	95 g

WIRING DIAGRAMS CONNECTOR VERSION

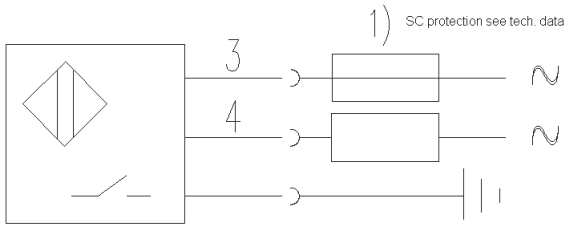

DIMENSIONS (mm)

CONFIGURATION WITH CABLE

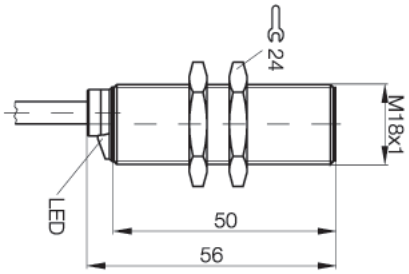

CONFIGURATION WITH CONNECTOR M12

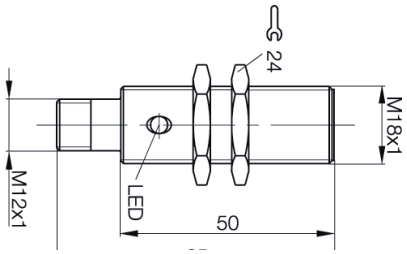

NAMUR

- 5÷24 V DC - 2 WIRES
- Range, 5mm to 8mm - flush, non flush
- Nickel plated brass
- Cable or M12 quick connect models

WIRING DIAGRAMS

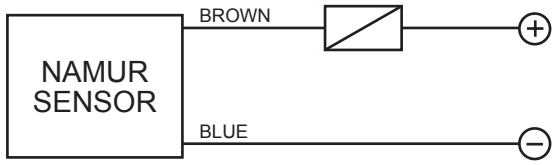

TECHNICAL DATA

	FLUSH	NON FLUSH
NOMINAL SWITCHING DISTANCE (Sn)	5 mm	8 mm
NOMINAL VOLTAGE (Load resistence 1 K)	7.7 ÷ 9 V DC	
DC SUPPLY VOLTAGE	5 ÷ 24 V DC	
RESIDUAL RIPPLE	≤ 10%	
HYSTERESIS	≤ 10%	
OUTPUT CURRENT (Metal present)	≤ 1 mA	
OUTPUT CURRENT (Metal absent)	≤ 3 mA	
SWITCHING FREQUENCY	2000 Hz	
REPEATABILITY	≤ 3%	
TEMPERATURE LIMITS	-25 ÷ +60 °C	
PROTECTION DEGREE	IP 67	
DEVICE MARKING	II 3D IP67 T6X	
CABLE LENGTH	2 m	
CABLE SECTION	2 x 0.25 mm²	
HOUSING MATERIAL	Nickel-plated brass	
WEIGHT - Cable output -	145 g	
WEIGHT - M12 connector output -	95 g	

CE c UL US LISTED

CONNECTION WITH CONNECTOR M12

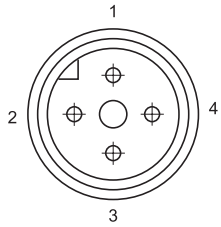

View of quadripole male connector

CONTACTS CONFIGURATION

Available	Contacts numbers			
	1	2	3	4
NAMUR	+		–	

DIMENSIONS (mm)

CONFIGURATION WITH CABLE

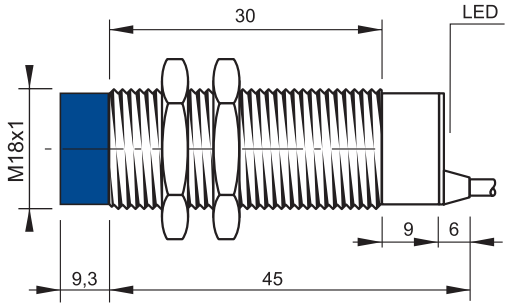

CONFIGURATION WITH CONNECTOR M12

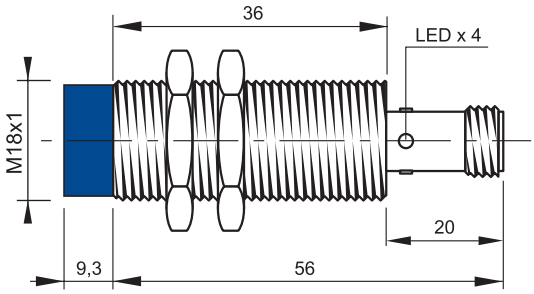

Note: the front part in blue refers to non flush models

10÷30 V DC - 3 WIRES NPN OR PNP OUTPUT

- Range, 5mm - flush
- Ambient temperature up to 180 °C
- FLUSH models
- Cable versions
- Stainless steel housing

WIRING DIAGRAMS

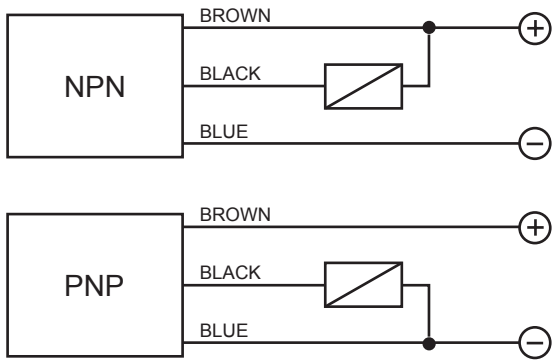

TECHNICAL DATA

	FLUSH
NOMINAL SWITCHING DISTANCE (Sn)	5 mm
NOMINAL VOLTAGE	10 ÷ 30 VDC (-15 / +10%)
RESIDUAL RIPPLE	≤ 15%
HYSTERESIS	< 15%
MAX. OUTPUT CURRENT	100 mA
RESIDUAL CURRENT	< 3 mA
VOLTAGE DROP (Sensor ON)	< 1.8 V
OPERATION LED	Not present
SWITCHING FREQUENCY	500 Hz
LOAD RESISTOR	100 KOhm
REPEATABILITY	≤ 3%
SHORT CIRCUIT PROTECTION	Present (self-resetting)
ELECTRIC PROTECTIONS	Against polarity reversal
TEMPERATURE LIMITS	- 25 ÷ +180 °C
PROTECTION DEGREE	IP 67
CABLE LENGTH	2 m
CABLE SECTION	3 x 0,25 mm^2
CABLE MATERIAL	Silicon
HOUSING MATERIAL	Stainless steel
WEIGHT - Cable output -	145 g

CE c UL US LISTED

DIMENSIONS (mm)

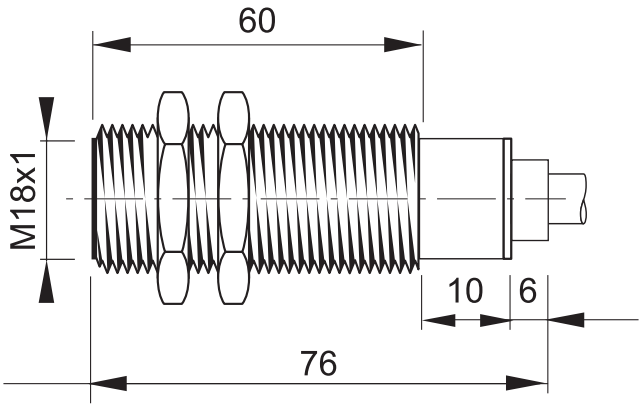

10÷30 VDC - 3 WIRES PNP OUTPUT

- Range, 5mm to 8mm - flush, non flush
- Stainless steel housing
- M12 quick connect models
- Operation LED

WIRING DIAGRAMS

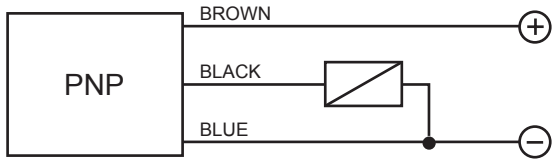

TECHNICAL DATA

	FLUSH	NON FLUSH
NOMINAL SWITCHING DISTANCE (Sn)	5 mm	8 mm
NOMINAL VOLTAGE	10 ÷ 30 VDC (-15 / +10%)	
RESIDUAL RIPPLE	≤ 10%	
HYSTERESIS	< 15%	
MAX. OUTPUT CURRENT	200 mA	
RESIDUAL CURRENT	< 10 mA	
VOLTAGE DROP (Sensor ON)	< 1.5 V (I = 100 mA)	
OPERATION LED	Present	
SWITCHING FREQUENCY	1000 Hz	500 Hz
REPEATABILITY	≤ 1%	
SHORT CIRCUIT PROTECTION	Present (self-resetting)	
TEMPERATURE LIMITS	- 25 ÷ +70 °C	
PROTECTION DEGREE	IP 67	
ACTIVE FACE MATERIAL	ETFE	
HOUSING MATERIAL	Stainless Steel	
WEIGHT - M12 Connector output -	95 g	

CE c UL us LISTED

CONNECTION WITH CONNECTOR M12

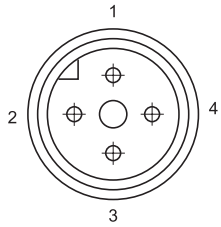

View of quadripole male connector

CONTACTS CONFIGURATION

Available	Contacts numbers			
	1	2	3	4
NO	+		–	NO

DIMENSIONS (mm)

FLUSH

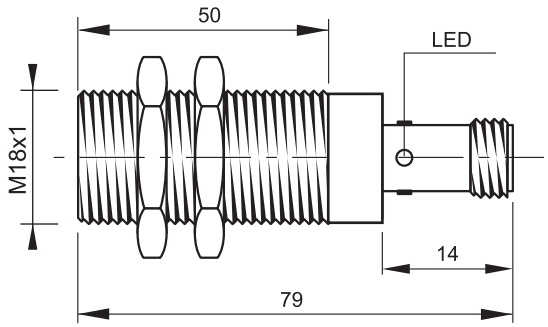

NON FLUSH

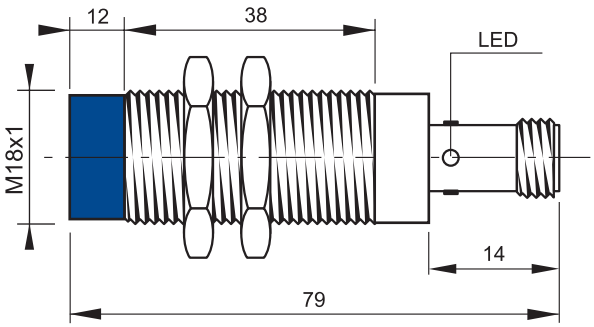

10÷30 VDC - 3 WIRES PNP OUTPUT

- Range, 5mm to 8mm - flush, non flush
- Stainless steel housing
- M12 quick connect models
- Operation LED

WIRING DIAGRAMS

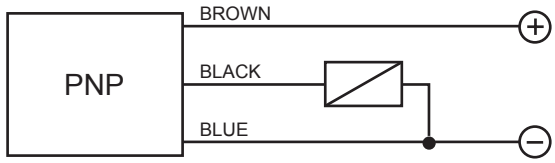

TECHNICAL DATA

	FLUSH	NON FLUSH
NOMINAL SWITCHING DISTANCE (Sn)	5 mm	8 mm
NOMINAL VOLTAGE	10 ÷ 30 VDC (-15 / +10%)	
RESIDUAL RIPPLE	≤ 10%	
HYSTERESIS	< 15%	
MAX. OUTPUT CURRENT	200 mA	
RESIDUAL CURRENT	< 10 mA	
VOLTAGE DROP (Sensor ON)	< 1.5 V (I = 100 mA)	
OPERATION LED	Present	
SWITCHING FREQUENCY	1000 Hz	500 Hz
REPEATABILITY	≤ 1%	
SHORT CIRCUIT PROTECTION	Present (self-resetting)	
TEMPERATURE LIMITS	- 25 ÷ +70 °C	
PROTECTION DEGREE	IP 67	
ACTIVE FACE MATERIAL	Stainless Steel	
HOUSING MATERIAL	Stainless Steel	
WEIGHT - M12 Connector output -	95 g	

CE c UL us LISTED

CONNECTION WITH CONNECTOR M12

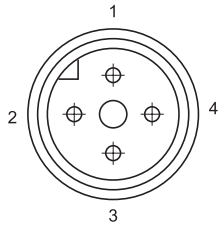

View of quadripole male connector

CONTACTS CONFIGURATION

Available	Contacts numbers			
	1	2	3	4
NO	+		–	NO

DIMENSIONS (mm)

FLUSH

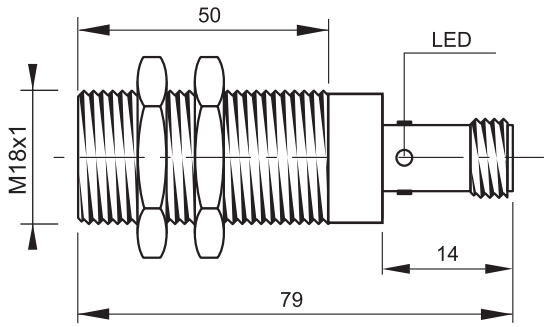

NON FLUSH

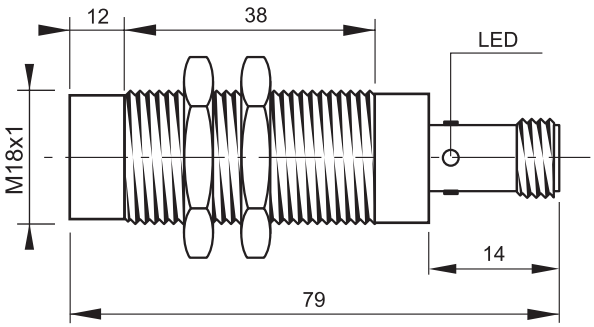

MODEL SELECTION AND ORDER INFORMATION

2MT CABLE

CODE	MODEL	RANGE	HOUSING	STEEL AISI316L	FLUSH	WIRES	NPN/PNP	NO/NC
95B061301	IS-18-A3-03	1X	STANDARD		•	3	NPN	NO
95B062101	IS-18-B3-03	1X	SHORT		•	3	NPN	NO
95B061321	IS-18-A4-03	1X	STANDARD		•	3	NPN	NC
95B062121	IS-18-B4-03	1X	SHORT		•	3	NPN	NC
95B061341	IS-18-A1-03	1X	STANDARD		•	3	PNP	NO
95B062141	IS-18-B1-03	1X	SHORT		•	3	PNP	NO
95B061361	IS-18-A2-03	1X	STANDARD		•	3	PNP	NC
95B062161	IS-18-B2-03	1X	SHORT		•	3	PNP	NC
95B061701	IS-18-C3-03	1X	STANDARD			3	NPN	NO
95B062501	IS-18-D3-03	1X	SHORT			3	NPN	NO
95B061721	IS-18-C4-03	1X	STANDARD			3	NPN	NC
95B062521	IS-18-D4-03	1X	SHORT			3	NPN	NC
95B061741	IS-18-C1-03	1X	STANDARD			3	PNP	NO
95B062541	IS-18-D1-03	1X	SHORT			3	PNP	NO
95B061761	IS-18-C2-03	1X	STANDARD			3	PNP	NC
95B062561	IS-18-D2-03	1X	SHORT			3	PNP	NC
95B063061	IS-18-G3-03	2X	SHORT		•	3	NPN	NO
95B063501	IS-18-G4-03	2X	SHORT		•	3	NPN	NC
95B063521	IS-18-G1-03	2X	SHORT		•	3	PNP	NO
95B063541	IS-18-G2-03	2X	SHORT		•	3	PNP	NC
95B063561	IS-18-H3-03	2X	SHORT			3	NPN	NO
95B063581	IS-18-H4-03	2X	SHORT			3	NPN	NC
95B063601	IS-18-H1-03	2X	SHORT			3	PNP	NO
95B063621	IS-18-H2-03	2X	SHORT			3	PNP	NC
95B062721	IS-18-G5-03	2X	SHORT		•	4	PNP	NO-NC
95B063811	IS-18-G9-03	2X	SHORT		•	2		PROG
95B063851	IS-18-G0-03	2X	SHORT		•	4	PROG	PROG
95B064200	IS-18-G6-03	2X	SHORT		•	4	NPN	NO-NC
95B064210	IS-18-H6-03	2X	SHORT			4	NPN	NO-NC
95B064220	IS-18-H5-03	2X	SHORT			4	PNP	NO-NC
95B064230	IS-18-A0-03	1X	STANDARD		•	4	PROG	
95B064240	IS-18-B0-03	1X	SHORT			4	PROG	
95B064250	IS-18-H0-03	2X	SHORT			4	PROG	PROG
95B064300	IS-18-A9-03	1X	STANDARD		•	2		PROG
95B064310	IS-18-B9-03	1X	SHORT			2		PROG
95B064320	IS-18-H9-03	2X	SHORT			2		PROG
95B064360	IS-18-A20-03	1X	STANDARD		•	2		
95B064370	IS-18-C20-03	1X	STANDARD			2		
95B060770	IS-18-A15-03	1X	STANDARD		•	2		NO

MODEL SELECTION AND ORDER INFORMATION

M12 CONNECTOR

CODE	MODEL	RANGE	HOUSING	STEEL AISI316L	FLUSH	WIRES	NPN/PNP	NO/NC
95B060340	IS-18-M3-S2	1X	SHORT	•	•	3	NPN	NO
95B060350	IS-18-M4-S2	1X	SHORT	•	•	3	NPN	NC
95B060320	IS-18-M1-S2	1X	SHORT	•	•	3	PNP	NO
95B060330	IS-18-M2-S2	1X	SHORT	•	•	3	PNP	NC
95B060380	IS-18-N3-S2	1X	SHORT	•		3	NPN	NO
95B060390	IS-18-N4-S2	1X	SHORT	•		3	NPN	NC
95B060360	IS-18-N1-S2	1X	SHORT	•		3	PNP	NO
95B060370	IS-18-N2-S2	1X	SHORT	•		3	PNP	NC
95B061311	IS-18-A3-S2	1X	STANDARD		•	3	NPN	NO
95B062111	IS-18-B3-S2	1X	SHORT		•	3	NPN	NO
95B061331	IS-18-A4-S2	1X	STANDARD		•	3	NPN	NC
95B062131	IS-18-B4-S2	1X	SHORT		•	3	NPN	NC
95B061351	IS-18-A1-S2	1X	STANDARD		•	3	PNP	NO
95B062151	IS-18-B1-S2	1X	SHORT		•	3	PNP	NO
95B061371	IS-18-A2-S2	1X	STANDARD		•	3	PNP	NC
95B062171	IS-18-B2-S2	1X	SHORT		•	3	PNP	NC
95B061711	IS-18-C3-S2	1X	STANDARD			3	NPN	NO
95B062511	IS-18-D3-S2	1X	SHORT			3	NPN	NO
95B061731	IS-18-C4-S2	1X	STANDARD			3	NPN	NC
95B062531	IS-18-D4-S2	1X	SHORT			3	NPN	NC
95B061751	IS-18-C1-S2	1X	STANDARD			3	PNP	NO
95B062551	IS-18-D1-S2	1X	SHORT			3	PNP	NO
95B061771	IS-18-C2-S2	1X	STANDARD			3	PNP	NC
95B062571	IS-18-D2-S2	1X	SHORT			3	PNP	NC
95B063491	IS-18-G3-S2	2X	SHORT		•	3	NPN	NO
95B063511	IS-18-G4-S2	2X	SHORT		•	3	NPN	NC
95B063531	IS-18-G1-S2	2X	SHORT		•	3	PNP	NO
95B063551	IS-18-G2-S2	2X	SHORT		•	3	PNP	NC
95B063571	IS-18-H3-S2	2X	SHORT			3	NPN	NO
95B063591	IS-18-H4-S2	2X	SHORT			3	NPN	NC
95B063611	IS-18-H1-S2	2X	SHORT			3	PNP	NO
95B063631	IS-18-H2-S2	2X	SHORT			3	PNP	NC
95B060100	IS-18-O3-S2	2X	SHORT	•	•	3	NPN	NO
95B060110	IS-18-O4-S2	2X	SHORT	•	•	3	NPN	NC
95B060080	IS-18-O1-S2	2X	SHORT	•	•	3	PNP	NO
95B060090	IS-18-O2-S2	2X	SHORT	•	•	3	PNP	NC
95B060140	IS-18-P3-S2	2X	SHORT	•		3	NPN	NO
95B060150	IS-18-P4-S2	2X	SHORT	•		3	NPN	NC
95B060120	IS-18-P1-S2	2X	SHORT	•		3	PNP	NO
95B060130	IS-18-P2-S2	2X	SHORT	•		3	PNP	NC
95B062711	IS-18-G6-S2	2X	SHORT		•	4	NPN	NO-NC
95B062731	IS-18-G5-S2	2X	SHORT		•	4	PNP	NO-NC
95B062791	IS-18-H6-S2	2X	SHORT			4	NPN	NO-NC
95B062811	IS-18-H5-S2	2X	SHORT			4	PNP	NO-NC
95B063941	IS-18-A9-S2	1X	STANDARD		•	2		PROG
95B064260	IS-18-A0-S2	1X	STANDARD		•	4	PROG	PROG
95B064270	IS-18-G0-S2	2X	SHORT		•	4	PROG	PROG
95B064280	IS-18-B0-S2	1X	SHORT			4	PROG	PROG
95B064290	IS-18-H0-S2	2X	SHORT			4	PROG	PROG
95B064330	IS-18-G9-S2	2X	SHORT		•	2		PROG
95B064340	IS-18-B9-S2	1X	SHORT			2		PROG
95B064350	IS-18-H9-S2	2X	SHORT			2		PROG
95B064380	IS-18-A20-S2	1X	STANDARD		•	2		
95B064390	IS-18-C20-S2	1X	STANDARD			2		
95B060780	IS-18-A15-S2	1X	STANDARD		•	2		NO
95B065350	IS-18-I1-S2	1X	STANDARD	•	•	2	PNP	NO
95B063881	IS-18-L1-S2	1X	STANDARD	•		2	PNP	NO
95B065380	IS-F18-S1-S2	1X	STANDARD		•	2	PNP	NO
95B065390	IS-F18-T1-S2	1X	STANDARD			2	PNP	NO

ACCESSORY SELECTION AND ORDER INFORMATION

CODE	MODEL	DESCRIPTION
95ACC3340	ST1218	ST1218 Brackets M12/M18 sensors
95ACC3350	ST1830	ST1830 Brackets M18/M30 sensors

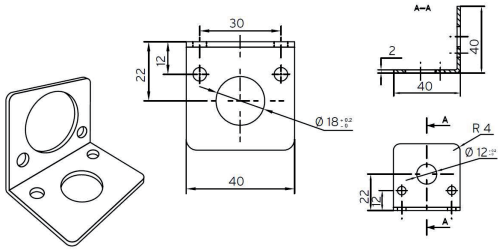

Material: stainless steel.

Weight 40 g

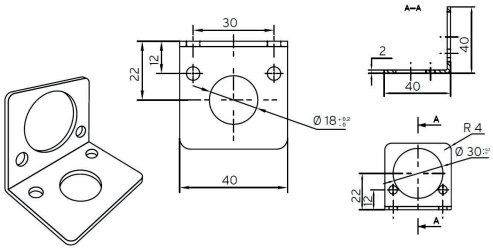

Material: stainless steel.

Weight 40 g

MODEL DESCRIPTION

IS - 04 - A 1 - 03

DIAMETER
04 = 4mm
05 = 5mm
65 = 6,5mm
08 = 8mm
12 = 12mm
18 = 18mm
30 = 30mm
40 = 40x40mm SQUARE
80 = 80x80mm SQUARE
88 = 8x8mm SQUARE

CONSTRUCTION
A= flush standard housing
B= flush short housing
BB= flush extra short housing
C= non flush standard housing
D= non flush short housing
E= flush standard housing double range
F= non flush standard housing double range
G= flush short housing double range
GG= flush extra short housing double range
H= non flush short housing double range
I= flush standard housing metal face
L= non flush standard housing metal face
M= flush short housing steel
N= non flush short housing steel
O= flush short housing steel double range
P= non flush short housing steel double range
Q= flush 8x8mm square housing
R= flush 8x8mm square housing double range
S= flush standard housing steel
T= non flush standard housing steel
U= flush standard housing steel double range
V= non flush standard housing steel double range
W= flush 40x40mm square housing
X= flush 40x40mm short square housing
Y= non flush 40x40mm square housing
Z= non flush 40x40mm short square housing

OUTPUT
1 = 10-30 Vdc PNP NO
2 = 10-30 Vdc PNP NC
3 = 10-30 Vdc NPN NO
4 = 10-30 Vdc NPN NC
5 = 10-30 Vdc PNP NO-NC
6 = 10-30 Vdc NPN NO-NC
7 = 24-230Vac – 2 wires NO
8 = 24-230Vac – 2 wires NC
9 = 10-30 Vdc - 2 wires NO-NC
0 = 10-30 Vdc - 4 wires
11 = Analog 4-20mA
12 = Analog 0-10V
13 = Analog 0-10V/4-20mA
14 = Analog 0-5V/1-5mA
15 = 20-250Vac/Vdc-2 and 3 wires NO
20 = NAMUR

CONNECTION
02 = Cable 500mm
03 = Cable 2mt
04 = Cable 700mm
S1 = M8 connector
S2 = M12 connector
S3 = terminal block*
S4 = unf 1/2”

* only for square housing version

Note: Not all code combinations are available. Please refer to alphabetical model index for the list of available models.

The company endeavours to continuously improve and renew its products; for this reason the technical data and contents of this catalogue may undergo variations without prior notice. For correct installation and use, the company can guarantee only the data indicated in the instruction manual supplied with the products.

M30 SERIES

There are millions of inductive sensors deployed in almost every area of factory automation. They detect metal objects contactless and are distinguished by a long operating life and extreme robustness. The Datalogic Automation inductive family provides the right solution to market requirements, offering a wide range of cylindrical and rectangular standard sensors with one or two set switching distances, available also with two, three or four wires connection models, short and standard housing and cable or connector version. Stainless steel version for both harsh environments or for FOOD applications.

Diversey ECOLAB

HIGHLIGHTS

- Wide range: suitable practically for all the industrial applications
- Stainless steel versions: suitable for food applications
- 1X and 2 X operating distances: high detection reliability and precise reading
- 2, 3 or 4 wire connection: flexible connection system to meet customer applications

APPLICATIONS

Automatic warehouse

Automotive

Trasportation lines

Packaging lines

10÷30 V DC - 3 WIRES NPN OR PNP OUTPUT

- Range, 10mm to 15mm - flush, non flush
- Short housing models
- Cable or M12 quick connect models
- Operation LED
- Stainless steel housing

WIRING DIAGRAMS

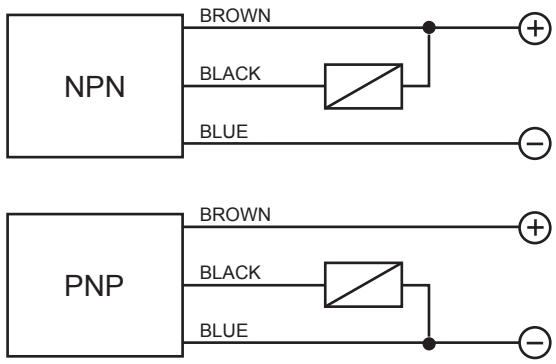

TECHNICAL DATA

	FLUSH	NON FLUSH
NOMINAL SWITCHING DISTANCE (Sn)	10 mm	15 mm
NOMINAL VOLTAGE	10 ÷ 30 VDC (-15 / +10%)	
RESIDUAL RIPPLE	≤ 10%	
HYSTERESIS	< 10%	
MAX. OUTPUT CURRENT	200 mA	
RESIDUAL CURRENT	< 10 mA	
VOLTAGE DROP	< 1.8 V (I = 100 mA)	
OPERATION LED	Yellow	
SWITCHING FREQUENCY	300 Hz	
START UP DELAY	≤ 50 ms	
REPEATABILITY	≤ 3%	
SHORT CIRCUIT PROTECTION	Present (self-resetting)	
ELECTRIC PROTECTIONS	Against polarity reversal inductive loads	
TEMPERATURE LIMITS	- 25 ÷ +60 °C	
PROTECTION DEGREE	IP 67	
CABLE LENGTH	2 m	
CABLE SECTION	3 x 0,25 mm^2	
HOUSING MATERIAL	Nickel-plated brass Stainless Steel	
WEIGHT - Cable output -	210 g	
WEIGHT - M12 Connector output -	170 g	

CONNECTION WITH CONNECTOR M12

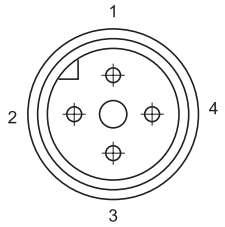

View of quadripole male connector

CONTACTS CONFIGURATION

Available	Contacts numbers			
	1	2	3	4
(NO or NC)	+		–	NO/NC

CE c UL US LISTED

DIMENSIONS (mm)

CONFIGURATION WITH CABLE

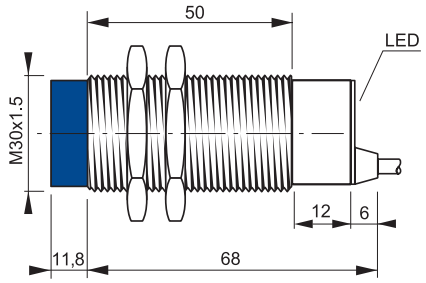

SHORT HOUSING

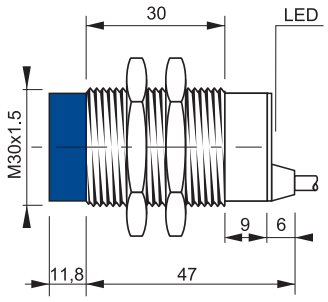

CONFIGURATION WITH CONNECTOR M12

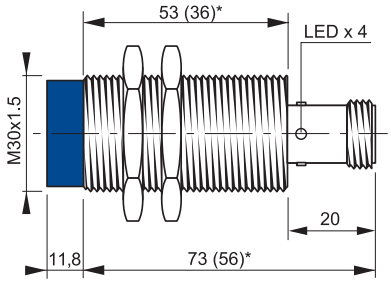

(*) The dimensions into brackets refer to short housing models
Note: the front part in blue refers to non flush models

10÷30 V DC - 3 WIRES NPN OR PNP OUTPUT

- Range, 15mm to 20mm - flush, non flush
- Short housing models
- Cable or M12 quick connect models
- Operation LED

WIRING DIAGRAMS

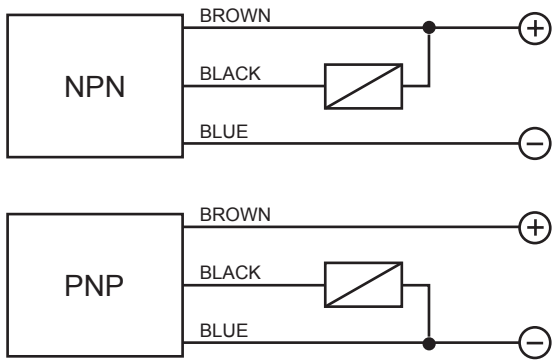

TECHNICAL DATA

	FLUSH	NON FLUSH
NOMINAL SWITCHING DISTANCE (Sn)	15 mm	20 mm
NOMINAL VOLTAGE	10 ÷ 30 VDC (-15 / +10%)	
RESIDUAL RIPPLE	≤ 10%	
HYSTERESIS	< 10%	
MAX. OUTPUT CURRENT	200 mA	
RESIDUAL CURRENT	< 10 mA	
VOLTAGE DROP	< 1.2 V (I = 100 mA)	
OPERATION LED	Yellow	
SWITCHING FREQUENCY	200 Hz	
START UP DELAY	≤ 75 ms	
REPEATABILITY	≤ 3%	
SHORT CIRCUIT PROTECTION	Present (self-resetting)	
ELECTRIC PROTECTIONS	Against polarity reversal inductive loads	
TEMPERATURE LIMITS	- 25 ÷ +70 °C	
PROTECTION DEGREE	IP 67	
CABLE LENGTH	2 m	
CABLE SECTION	3 x 0,25 mm^2	
HOUSING MATERIAL	Nickel-plated brass	
WEIGHT - Cable output -	210 g	
WEIGHT - M12 Connector output -	170 g	

CONNECTION WITH CONNECTOR M12

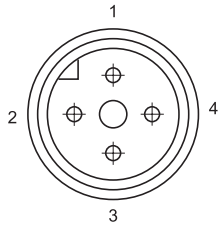

View of quadripole male connector

CONTACTS CONFIGURATION

Available	Contacts numbers			
	1	2	3	4
(NO or NC)	+		–	NO/NC

DIMENSIONS (mm)

CONFIGURATION WITH CABLE

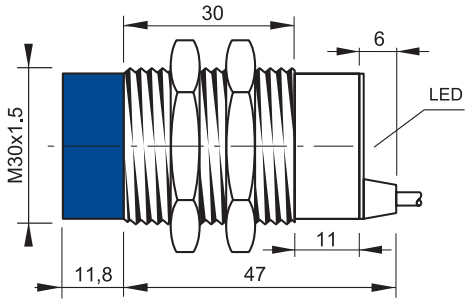

CONFIGURATION WITH CONNECTOR M12

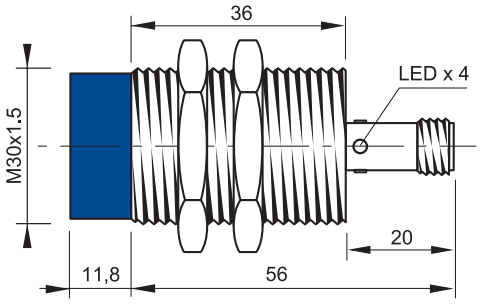

Note: the front part in blue refers to non flush models

10÷30 V DC - 4 WIRES NPN OR PNP OUTPUT

- Range, 15mm to 20mm - flush, non flush
- Short housing
- Cable or M12 quick connect models
- 200mA NPN or PNP
- Operation LED

WIRING DIAGRAMS

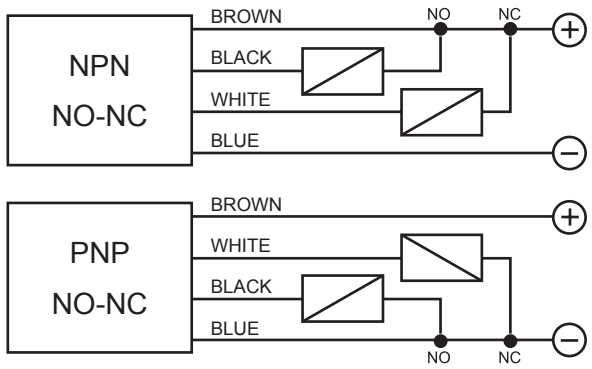

TECHNICAL DATA

	FLUSH	NON FLUSH
NOMINAL SWITCHING DISTANCE (Sn)	15 mm	20 mm
NOMINAL VOLTAGE	10 ÷ 30 VDC (-15 / +10%)	
RESIDUAL RIPPLE	≤ 10%	
HYSTERESIS	< 10%	
MAX. OUTPUT CURRENT	200 mA	
RESIDUAL CURRENT	< 10 mA	
VOLTAGE DROP	< 1.2 V (I = 100 mA)	
OPERATION LED	Yellow	
SWITCHING FREQUENCY	200 Hz	
START UP DELAY	≤ 75 ms	
REPEATABILITY	≤ 3%	
SHORT CIRCUIT PROTECTION	Present (self-resetting)	
ELECTRIC PROTECTIONS	Against polarity reversal inductive loads	
TEMPERATURE LIMITS	- 25 ÷ +70 °C	
PROTECTION DEGREE	IP 67	
CABLE LENGTH	2 m	
CABLE SECTION	3 x 0,25 mm^2	
HOUSING MATERIAL	Nickel-plated brass	
WEIGHT - Cable output -	210 g	
WEIGHT - M12 Connector output -	170 g	

CONNECTION WITH CONNECTOR M12

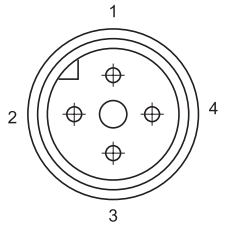

View of quadripole male connector

CONTACTS CONFIGURATION

Available	Contacts numbers			
	1	2	3	4
(NO + NC)	+	NC	–	NO

DIMENSIONS (mm)

CONFIGURATION WITH CABLE

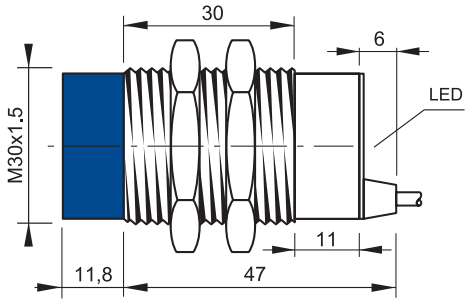

CONFIGURATION WITH CONNECTOR M12

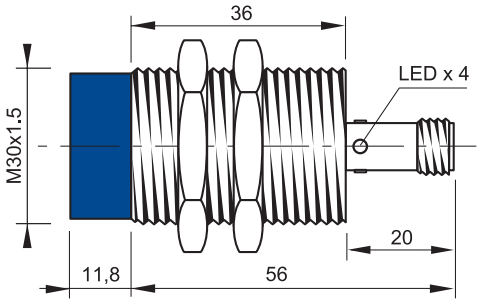

Note: the front part in blue refers to non flush models

12÷30 V DC - 4 WIRES PROGRAMMABLE OUTPUT

- Range, 10mm to 15mm - flush, non flush
- Programmable outputs: NPN/PNP, NO or NC
- Cable or M12 quick connect models
- Nickel plated brass

TECHNICAL DATA

	FLUSH	NON FLUSH
NOMINAL SWITCHING DISTANCE (Sn)	10 mm	15 mm
NOMINAL VOLTAGE	12 ÷ 30 VDC (-15/+10%)	
RESIDUAL RIPPLE	≤ 10%	
HYSTERESIS	< 10%	
OUTPUT	NPN or PNP (may be selected)	
CONTACT	NO or NC (may be selected)	
MAX. CURRENT OUTPUT	200 mA	
ABSORPTION AT 24 VDC	< 1.2 mA	
VOLTAGE DROP (Sensor ON)	< 1,8 V (I = 100 mA)	
OPERATION LED	Yellow	
SWITCHING FREQUENCY	300 Hz	
START UP DELAY	≤ 50 ms	
REPEATABILITY	≤ 3%	
SHORT CIRCUIT PROTECTION	Present (self-resetting)	
ELECTRIC PROTECTIONS	Against polarity reversal - inductive loads	
TEMPERATURE LIMITS	- 25 ÷ +70 °C	
PROTECTION DEGREE	IP 67	
CABLE LENGTH	2 m	
CABLE SECTION	4 x 0.25 mm²	
HOUSING MATERIAL	Nickel-plated brass	
WEIGHT - Cable output -	210 g	
WEIGHT - M12 Connector output -	170 g	

CE c UL US LISTED

WIRING DIAGRAMS

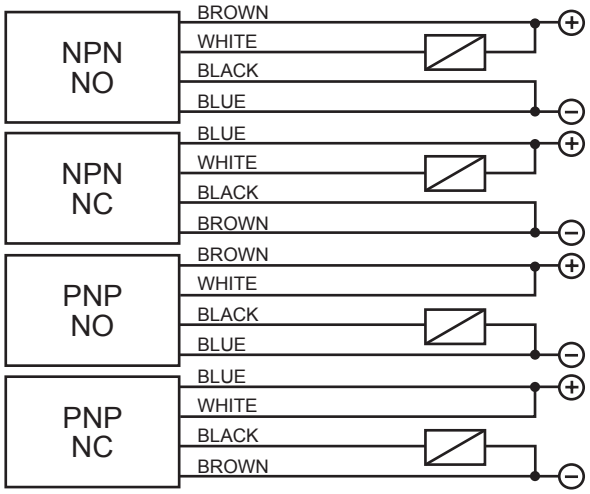

Thanks to the output status which is not paired with the rest of the circuit, the sensors of this kind of availability give enormous advantages, such as the possibility of obtaining the four output configurations (NPN-NO, NPN-NC, PNP-NO, PNP-NC,) on the same model.

CONNECTION WITH CONNECTOR M12

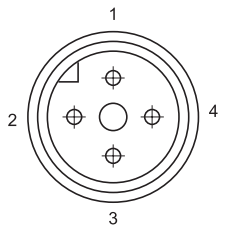

View of quadripole male connector

CONTACTS CONFIGURATION

Output	Contacts numbers			
	1	2	3	4
NPN NO	+	NO	–	–
NPN NC	–	NC	+	–
PNP NO	+	+	–	NO
PNP NC	–	+	+	NC

DIMENSIONS (mm)

CONFIGURATION WITH CABLE

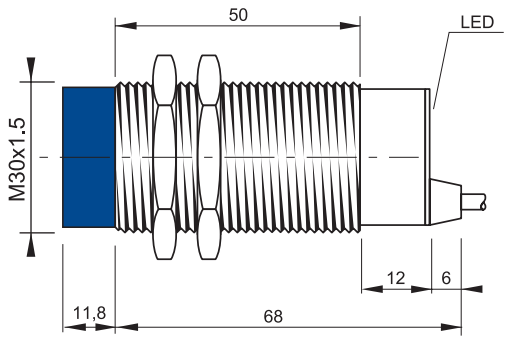

CONFIGURATION WITH CONNECTOR M12

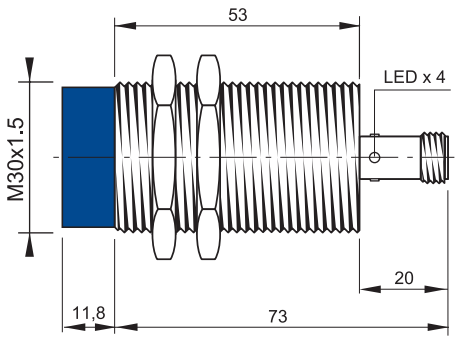

Note: the front part in blue refers to non flush models.

12÷30 V DC - 4 WIRES PROGRAMMABLE OUTPUT

- Range, 15mm to 20mm - flush, non flush
- Programmable outputs: NPN/PNP, NO or NC
- Cable or M12 quick connect models
- Nickel plated brass
- Operation LED
- 200 mA max output

WIRING DIAGRAMS

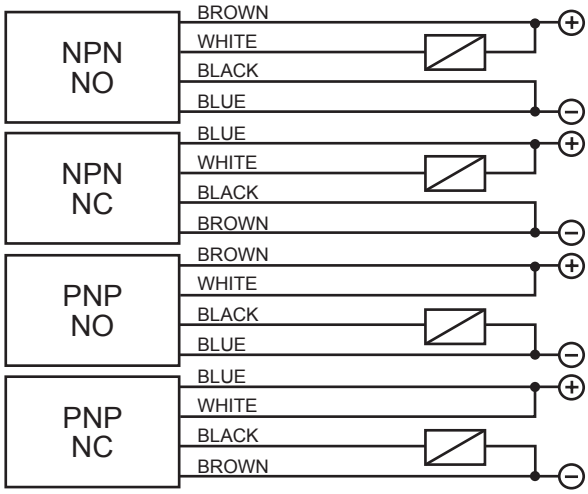

Thanks to the output status which is not paired with the rest of the circuit, the sensors of this kind of availability give enormous advantages, such as the possibility of obtaining the four output configurations (NPN-NO, NPN-NC, PNP-NO, PNP-NC,) on the same model.

TECHNICAL DATA

	FLUSH	NON FLUSH
NOMINAL SWITCHING DISTANCE (Sn)	15 mm	20 mm
NOMINAL VOLTAGE	12 ÷ 30 VDC (-15/+10%)	
RESIDUAL RIPPLE	≤ 10%	
HYSTERESIS	< 10%	
OUTPUT	NPN or PNP (may be selected)	
CONTACT	NO or NC (may be selected)	
MAX. CURRENT OUTPUT	200 mA	
ABSORPTION AT 24 VDC	< 1.2 mA	
VOLTAGE DROP (Sensor ON)	< 1,8 V (I = 100 mA)	
OPERATION LED	Yellow	
SWITCHING FREQUENCY	300 Hz	
START UP DELAY	≤ 50 ms	
REPEATABILITY	≤ 3%	
SHORT CIRCUIT PROTECTION	Present (self-resetting)	
ELECTRIC PROTECTIONS	Against polarity reversal - inductive loads	
TEMPERATURE LIMITS	- 25 ÷ +70 °C	
PROTECTION DEGREE	IP 67	
CABLE LENGTH	2 m	
CABLE SECTION	4 x 0.25 mm²	
HOUSING MATERIAL	Nickel-plated brass	
WEIGHT - Cable output -	210 g	
WEIGHT - M12 Connector output -	170 g	

CONNECTION WITH CONNECTOR M12

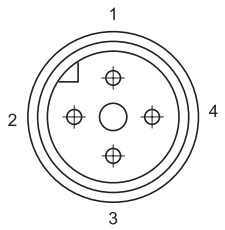

View of quadripole male connector

CONTACTS CONFIGURATION

Output	Contacts numbers			
	1	2	3	4
NPN NO	+	NO	–	–
NPN NC	–	NC	+	–
PNP NO	+	+	–	NO
PNP NC	–	+	+	NC

DIMENSIONS (mm)

CONFIGURATION WITH CABLE

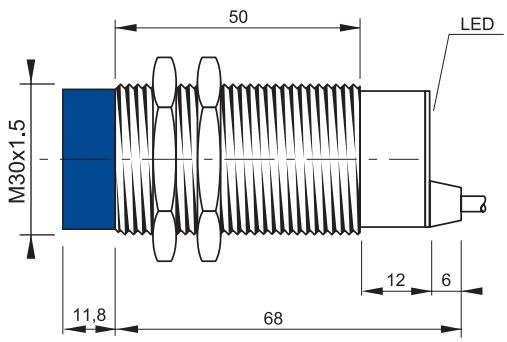

CONFIGURATION WITH CONNECTOR M12

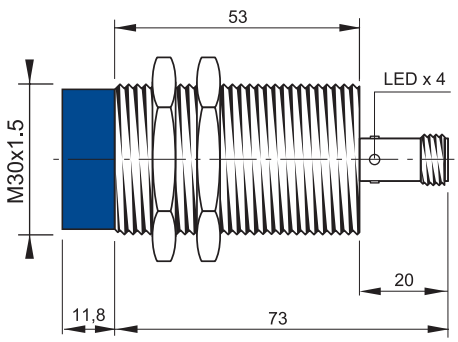

Note: the front part in blue refers to non flush models.

10÷30 VDC 2 WIRES NO-NC PROGRAMMABLE OUTPUT

- Range, 10mm to 15mm - flush, non flush
- Cable or M12 quick connect models
- Nickel plated brass

WIRING DIAGRAMS

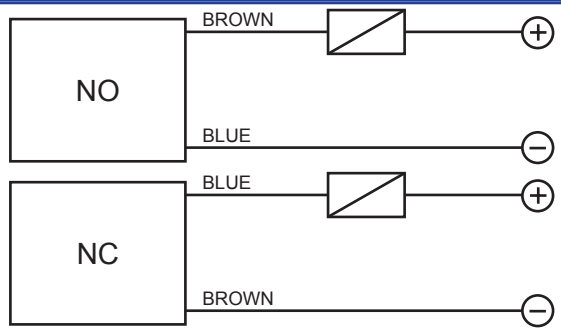

WARNING: The load can be indifferently connected in series to the blue wire or to the brown wire to simulate NPN or PNP functionning logic.

TECHNICAL DATA

	FLUSH	NON FLUSH
NOMINAL SWITCHING DISTANCE (Sn)	10 mm	15 mm
NOMINAL VOLTAGE	10 ÷ 30 VDC (-15 / +10%)	
RESIDUAL RIPPLE	≤ 10%	
HYSTERESIS	< 10%	
MAX. OUTPUT CURRENT	100 mA	
MIN. OUTPUT CURRENT	> 1,6 mA	
RESIDUAL CURRENT	< 1,6 mA	
VOLTAGE DROP	< 6,5 V (I = 100 mA)	
OPERATION LED	Yellow	
SWITCHING FREQUENCY	300 Hz	
START UP DELAY	≤ 50 ms	
REPEATABILITY	≤ 3%	
SHORT CIRCUIT PROTECTION	Present (self-resetting)	
ELECTRIC PROTECTIONS	Against polarity reversal inductive loads	
TEMPERATURE LIMITS	- 25 ÷ +70 °C	
PROTECTION DEGREE	IP 67	
CABLE LENGTH	2 m	
CABLE SECTION	2 x 0.25 mm²	
HOUSING MATERIAL	Nickel-plated brass	
WEIGHT - Cable output -	210 g	
WEIGHT -M12 Connector output -	170 g	

CONNECTION WITH CONNECTOR M12

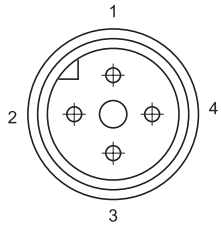

View of quadripole male connector

CONTACTS CONFIGURATION

Available	Contacts numbers			
	1	2	3	4
NO	+		–	
NC	–		+	

DIMENSIONS (mm)

CONFIGURATION WITH CABLE

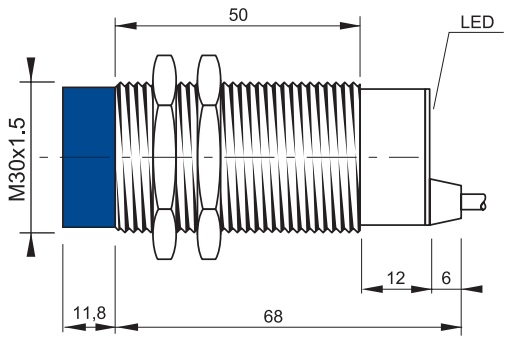

CONFIGURATION WITH CONNECTOR M12

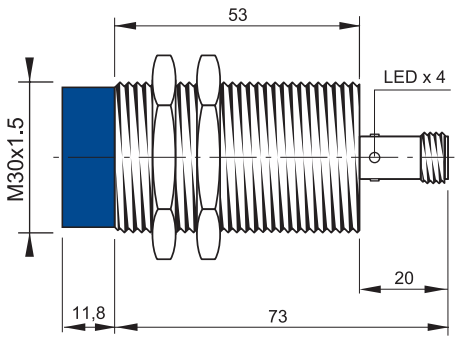

Note: the front part in blue refers to non flush models.

10÷30 V DC - 2 WIRES NO-NC PROGRAMABLE OUTPUT

- Range, 15mm to 20mm - flush, non flush
- Cable or M12 quick connect models
- Nickel plated brass

WIRING DIAGRAMS

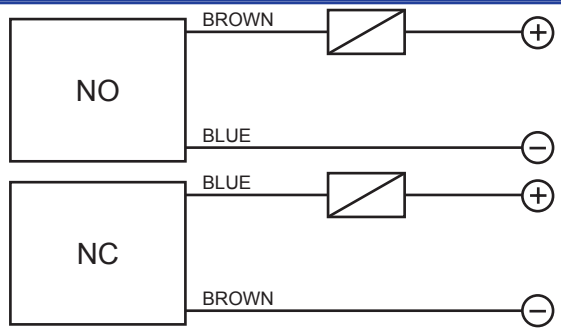

WARNING: The load can be indifferently connected in series to the blue wire or to the brown wire to simulate NPN or PNP functionning logic.

TECHNICAL DATA

	FLUSH	NON FLUSH
NOMINAL SWITCHING DISTANCE (Sn)	15 mm	20 mm
NOMINAL VOLTAGE	10 ÷ 30 VDC (-15 / +10%)	
RESIDUAL RIPPLE	≤ 10%	
HYSTERESIS	< 10%	
MAX. OUTPUT CURRENT	100 mA	
MIN. OUTPUT CURRENT	> 1,6 mA	
RESIDUAL CURRENT	< 1,6 mA	
VOLTAGE DROP	< 6,5 V (I = 100 mA)	
OPERATION LED	Yellow	
SWITCHING FREQUENCY	200 Hz	
START UP DELAY	≤ 50 ms	
REPEATABILITY	≤ 3%	
SHORT CIRCUIT PROTECTION	Present (self-resetting)	
ELECTRIC PROTECTIONS	Against polarity reversal inductive loads	
TEMPERATURE LIMITS	- 25 ÷ +70 °C	
PROTECTION DEGREE	IP 67	
CABLE LENGTH	2 m	
CABLE SECTION	2 x 0.25 mm²	
HOUSING MATERIAL	Nickel-plated brass	
WEIGHT - Cable output -	210 g	
WEIGHT - M12 Connector output -	170 g	

CONNECTION WITH CONNECTOR M12

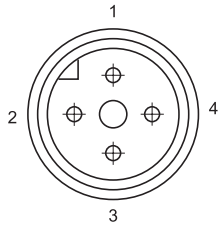

View of quadripole male connector

CONTACTS CONFIGURATION

Available	Contacts numbers			
	1	2	3	4
NO	+		–	
NC	–		+	

DIMENSIONS (mm)

CONFIGURATION WITH CABLE

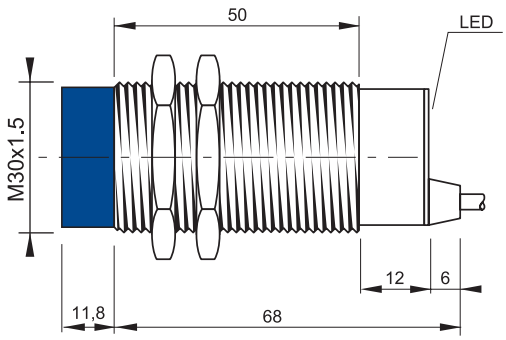

CONFIGURATION WITH CONNECTOR M12

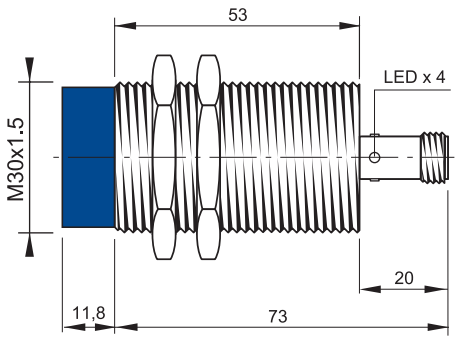

Note: the front part in blue refers to non flush models.

20÷250 V AC - 2 OR 3 WIRES NO OUTPUT

- Range, 10mm - flush
- Cable or M12 quick connect models
- Ultra low consumption < 0,7 mA
- Repeatability 5%
- 500mA max output

WIRING DIAGRAMS CABLE VERSION

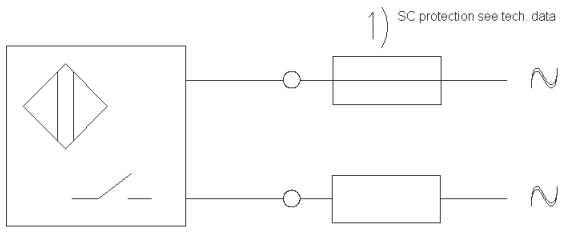

TECHNICAL DATA

	FLUSH
NOMINAL SWITCHING DISTANCE (Sn)	2 mm
NOMINAL VOLTAGE	20 ÷ 250 VAC
NET FREQUENCY	50 ÷ 60 Hz
HYSTERESIS	< 10%
MAX. OUTPUT CURRENT	500 mA
MIN. OUTPUT CURRENT	20 mA
MAX. INRUSH CURRENT (20 ms)	1.5 A
RESIDUAL CURRENT	< 0.7 mA
VOLTAGE DROP (Sensor ON)	< 5 V (I = 100 mA)
OPERATION LED	Yellow
SWITCHING FREQUENCY	25 Hz
START UP DELAY	≤ 300 ms
REPEATABILITY	5%
TEMPERATURE LIMITS	-25 ÷ +70 °C
PROTECTION DEGREE	IP 67
CABLE LENGTH	2 m
CABLE SECTION	2 x 0.25 mm²
HOUSING MATERIAL	Nickel-plated brass
WEIGHT - Cable output -	145 g
WEIGHT - M12 connector output -	95 g

WIRING DIAGRAMS CONNECTOR VERSION

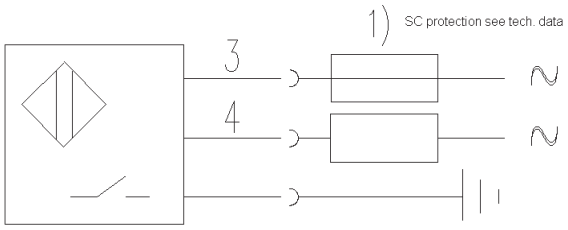

CE c UL US LISTED

DIMENSIONS (mm)

CONFIGURATION WITH CABLE

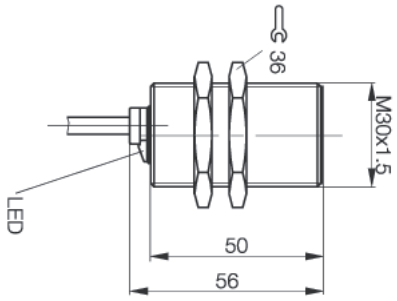

CONFIGURATION WITH CONNECTOR M12

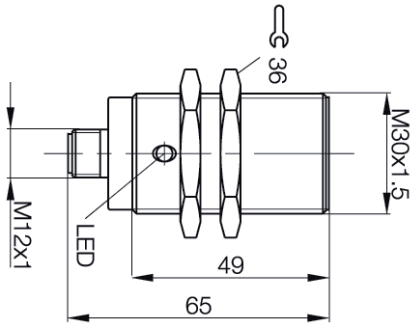

NAMUR

- 5÷24 V DC - 2 WIRES
- Range, 10mm to 15mm - flush, non flush
- Nickel plated brass
- Cable or M12 quick connect models

WIRING DIAGRAMS

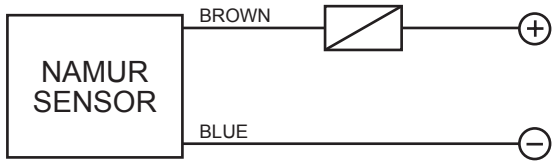

TECHNICAL DATA

	FLUSH	NON FLUSH
NOMINAL SWITCHING DISTANCE (Sn)	10 mm	15 mm
NOMINAL VOLTAGE (Load resistence 1 K)	7.7 ÷ 9 V DC	
DC SUPPLY VOLTAGE	5 ÷ 24 V DC	
RESIDUAL RIPPLE	≤ 10%	
HYSTERESIS	≤ 10%	
OUTPUT CURRENT (Metal present)	≤ 1 mA	
OUTPUT CURRENT (Metal absent)	≤ 3 mA	
SWITCHING FREQUENCY	2000 Hz	
REPEATABILITY	≤ 3%	
TEMPERATURE LIMITS	-25 ÷ +60 °C	
PROTECTION DEGREE	IP 67	
DEVICE MARKING	II 3D IP67 T6X	
CABLE LENGTH	2 m	
CABLE SECTION	2 x 0.25 mm²	
HOUSING MATERIAL	Nickel-plated brass	
WEIGHT - Cable output -	210 g	
WEIGHT - M12 Connector output -	170 g	

CONNECTION WITH CONNECTOR M12

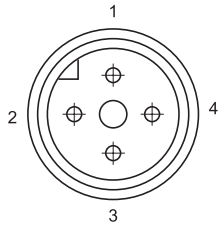

View of quadripole male connector

CONTACTS CONFIGURATION

Available	Contacts numbers			
	1	2	3	4
NAMUR	+		–	

DIMENSIONS (mm)

CONFIGURATION WITH CABLE

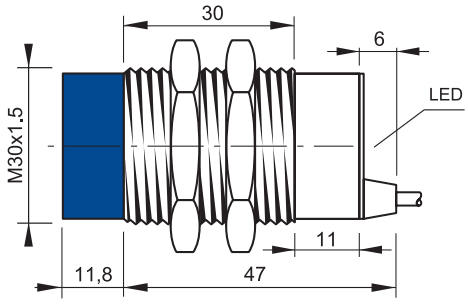

CONFIGURATION WITH CONNECTOR M12

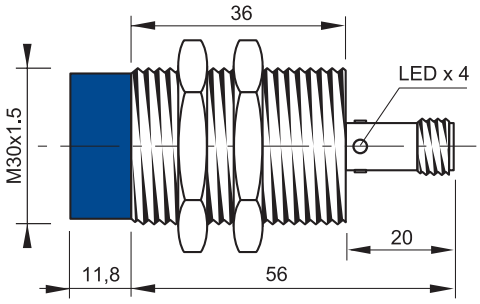

Note: the front part in blue refers to non flush models

MODEL SELECTION AND ORDER INFORMATION

2MT CABLE

CODE	MODEL	RANGE	HOUSING	STEEL AISI316L	FLUSH	WIRES	NPN/PNP	NO/NC
95B061381	IS-30-A3-03	1X	STANDARD		•	3	NPN	NO
95B062181	IS-30-B3-03	1X	SHORT		•	3	NPN	NO
95B061401	IS-30-A4-03	1X	STANDARD		•	3	NPN	NC
95B062201	IS-30-B4-03	1X	SHORT		•	3	NPN	NC
95B061421	IS-30-A1-03	1X	STANDARD		•	3	PNP	NO
95B062221	IS-30-B1-03	1X	SHORT		•	3	PNP	NO
95B061441	IS-30-A2-03	1X	STANDARD		•	3	PNP	NC
95B062241	IS-30-B2-03	1X	SHORT		•	3	PNP	NC
95B061781	IS-30-C3-03	1X	STANDARD			3	NPN	NO
95B062581	IS-30-D3-03	1X	SHORT			3	NPN	NO
95B061801	IS-30-C4-03	1X	STANDARD			3	NPN	NC
95B062601	IS-30-D4-03	1X	SHORT			3	NPN	NC
95B061821	IS-30-C1-03	1X	STANDARD			3	PNP	NO
95B062621	IS-30-D1-03	1X	SHORT			3	PNP	NO
95B061841	IS-30-C2-03	1X	STANDARD			3	PNP	NC
95B062641	IS-30-D2-03	1X	SHORT			3	PNP	NC
95B063641	IS-30-G3-03	2X	SHORT		•	3	NPN	NO
95B063661	IS-30-G4-03	2X	SHORT		•	3	NPN	NC
95B063681	IS-30-G1-03	2X	SHORT		•	3	PNP	NO
95B063701	IS-30-G2-03	2X	SHORT		•	3	PNP	NC
95B063721	IS-30-H3-03	2X	SHORT			3	NPN	NO
95B063741	IS-30-H4-03	2X	SHORT			3	NPN	NC
95B063761	IS-30-H1-03	2X	SHORT			3	PNP	NO
95B063781	IS-30-H2-03	2X	SHORT			3	PNP	NC
95B063821	IS-30-G5-03	2X	SHORT		•	4	PNP	NO-NC
95B063861	IS-30-G0-03	2X	SHORT		•	4	PROG	PROG
95B064400	IS-30-G6-03	2X	SHORT		•	4	NPN	NO-NC
95B064410	IS-30-H6-03	2X	SHORT			4	NPN	NO-NC
95B064420	IS-30-H5-03	2X	SHORT			4	PNP	NO-NC
95B064460	IS-30-A0-03	1X	STANDARD		•	4	PROG	PROG
95B064470	IS-30-B0-03	1X	STANDARD			4	PROG	PROG
95B064480	IS-30-H0-03	2X	SHORT			4	PROG	PROG
95B064530	IS-30-A9-03	1X	STANDARD		•	2		PROG
95B064540	IS-30-G9-03	2X	SHORT		•	2		PROG
95B064550	IS-30-B9-03	1X	STANDARD			2		PROG
95B064560	IS-30-H9-03	2X	SHORT			2		PROG
95B064610	IS-30-A20-03	1X	STANDARD		•	2		
95B064620	IS-30-C20-03	1X	STANDARD			2		
95B060810	IS-30-A15-03	1X	STANDARD		•	2		NO

MODEL SELECTION AND ORDER INFORMATION

M12 CONNECTOR

CODE	MODEL	RANGE	HOUSING	STEEL AISI316L	FLUSH	WIRES	NPN/PNP	NO/NC
95B060420	IS-30-M3-S2	1X	SHORT	•	•	3	NPN	NO
95B060430	IS-30-M4-S2	1X	SHORT	•	•	3	NPN	NC
95B060400	IS-30-M1-S2	1X	SHORT	•	•	3	PNP	NO
95B060410	IS-30-M2-S2	1X	SHORT	•	•	3	PNP	NC
95B060460	IS-30-N3-S2	1X	SHORT	•		3	NPN	NO
95B060470	IS-30-N4-S2	1X	SHORT	•		3	NPN	NC
95B060440	IS-30-N1-S2	1X	SHORT	•		3	PNP	NO
95B060450	IS-30-N2-S2	1X	SHORT	•		3	PNP	NC
95B061391	IS-30-A3-S2	1X	STANDARD		•	3	NPN	NO
95B062191	IS-30-B3-S2	1X	SHORT		•	3	NPN	NO
95B061411	IS-30-A4-S2	1X	STANDARD		•	3	NPN	NC
95B062211	IS-30-B4-S2	1X	SHORT		•	3	NPN	NC
95B061431	IS-30-A1-S2	1X	STANDARD		•	3	PNP	NO
95B062231	IS-30-B1-S2	1X	SHORT		•	3	PNP	NO
95B061451	IS-30-A2-S2	1X	STANDARD		•	3	PNP	NC
95B062251	IS-30-B2-S2	1X	SHORT		•	3	PNP	NC
95B061791	IS-30-C3-S2	1X	STANDARD			3	NPN	NO
95B062591	IS-30-D3-S2	1X	SHORT			3	NPN	NO
95B061811	IS-30-C4-S2	1X	STANDARD			3	NPN	NC
95B062611	IS-30-D4-S2	1X	SHORT			3	NPN	NC
95B061831	IS-30-C1-S2	1X	STANDARD			3	PNP	NO
95B062631	IS-30-D1-S2	1X	SHORT			3	PNP	NO
95B061851	IS-30-C2-S2	1X	STANDARD			3	PNP	NC
95B062651	IS-30-D2-S2	1X	SHORT			3	PNP	NC
95B063651	IS-30-G3-S2	2X	SHORT		•	3	NPN	NO
95B063671	IS-30-G4-S2	2X	SHORT		•	3	NPN	NC
95B063691	IS-30-G1-S2	2X	SHORT		•	3	PNP	NO
95B063711	IS-30-G2-S2	2X	SHORT		•	3	PNP	NC
95B063731	IS-30-H3-S2	2X	SHORT			3	NPN	NO
95B063751	IS-30-H4-S2	2X	SHORT			3	NPN	NC
95B063771	IS-30-H1-S2	2X	SHORT			3	PNP	NO
95B063791	IS-30-H2-S2	2X	SHORT			3	PNP	NC
95B060180	IS-30-O3-S2	2X	SHORT	•	•	3	NPN	NO
95B060190	IS-30-O4-S2	2X	SHORT	•	•	3	NPN	NC
95B060160	IS-30-O1-S2	2X	SHORT	•	•	3	PNP	NO
95B060170	IS-30-O2-S2	2X	SHORT	•	•	3	PNP	NC
95B060220	IS-30-P3-S2	2X	SHORT	•		3	NPN	NO
95B060230	IS-30-P4-S2	2X	SHORT	•		3	NPN	NC
95B060200	IS-30-P1-S2	2X	SHORT	•		3	PNP	NO
95B060210	IS-30-P2-S2	2X	SHORT	•		3	PNP	NC
95B063831	IS-30-G5-S2	2X	SHORT		•	4	PNP	NO-NC
95B064430	IS-30-G6-S2	2X	SHORT		•	4	NPN	NO-NC
95B064440	IS-30-H6-S2	2X	SHORT			4	NPN	NO-NC
95B064450	IS-30-H5-S2	2X	SHORT			4	PNP	NO-NC
95B064490	IS-30-A0-S2	1X	STANDARD		•	4	PROG	PROG
95B064500	IS-30-G0-S2	2X	SHORT		•	4	PROG	PROG
95B064510	IS-30-B0-S2	1X	STANDARD			4	PROG	PROG
95B064520	IS-30-H0-S2	2X	SHORT			4	PROG	PROG
95B064570	IS-30-A9-S2	1X	STANDARD		•	2		PROG
95B064580	IS-30-G9-S2	2X	SHORT		•	2		PROG
95B064590	IS-30-B9-S2	1X	STANDARD			2		PROG
95B064600	IS-30-H9-S2	2X	SHORT			2		PROG
95B064630	IS-30-A20-S2	1X	STANDARD		•	2		
95B064640	IS-30-C20-S2	1X	STANDARD			2		
95B064450	IS-30-H5-S2	2X	SHORT			4	PNP	NO-NC
95B064490	IS-30-A0-S2	1X	STANDARD		•	4	PROG	PROG

MODEL SELECTION AND ORDER INFORMATION

M12 CONNECTOR

CODE	MODEL	RANGE	HOUSING	STEEL AISI316L	FLUSH	WIRES	NPN/PNP	NO/NC
95B064500	IS-30-G0-S2	2X	SHORT		•	4	PROG	PROG
95B064510	IS-30-B0-S2	1X	SHORT		•	4	PROG	PROG
95B064520	IS-30-H0-S2	2X	SHORT			4	PROG	PROG
95B064570	IS-30-A9-S2	1X	STANDARD		•	2		PROG
95B064580	IS-30-G9-S2	2X	SHORT		•	2		PROG
95B064590	IS-30-B9-S2	1X	SHORT		•	2		PROG
95B064600	IS-30-H9-S2	2X	SHORT			2		PROG
95B060820	IS-30-A15-S2	1X	STANDARD		•	2		NO

ACCESSORY SELECTION AND ORDER INFORMATION

CODE	MODEL	DESCRIPTION
95ACC3350	ST1830	ST1830 Brackets M18/M30 sensors

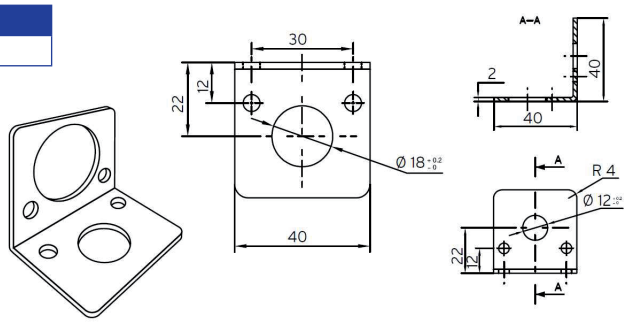

Material: stainless steel.

Weight 40 g

MODEL DESCRIPTION

IS - 04 - A 1 - 03

DIAMETER
04 = 4mm
05 = 5mm
65 = 6,5mm
08 = 8mm
12 = 12mm
18 = 18mm
30 = 30mm
40 = 40x40mm SQUARE
80 = 80x80mm SQUARE
88 = 8x8mm SQUARE

CONSTRUCTION
A= flush standard housing
B= flush short housing
BB= flush extra short housing
C= non flush standard housing
D= non flush short housing
E= flush standard housing double range
F= non flush standard housing double range
G= flush short housing double range
GG= flush extra short housing double range
H= non flush short housing double range
I= flush standard housing metal face
L= non flush standard housing metal face
M= flush short housing steel
N= non flush short housing steel
O= flush short housing steel double range
P= non flush short housing steel double range
Q= flush 8x8mm square housing
R= flush 8x8mm square housing double range
S= flush standard housing steel
T= non flush standard housing steel
U= flush standard housing steel double range
V= non flush standard housing steel double range
W= flush 40x40mm square housing
X= flush 40x40mm short square housing
Y= non flush 40x40mm square housing
Z= non flush 40x40mm short square housing

OUTPUT
1 = 10-30 Vdc PNP NO
2 = 10-30 Vdc PNP NC
3 = 10-30 Vdc NPN NO
4 = 10-30 Vdc NPN NC
5 = 10-30 Vdc PNP NO-NC
6 = 10-30 Vdc NPN NO-NC
7 = 24-230Vac – 2 wires NO
8 = 24-230Vac – 2 wires NC
9 = 10-30 Vdc - 2 wires NO-NC
0 = 10-30 Vdc - 4 wires
11 = Analog 4-20mA
12 = Analog 0-10V
13 = Analog 0-10V/4-20mA
14 = Analog 0-5V/1-5mA
15 = 20-250Vac/Vdc-2 and 3 wires NO
20 = NAMUR

CONNECTION
02 = Cable 500mm
03 = Cable 2mt
04 = Cable 700mm
S1 = M8 connector
S2 = M12 connector
S3 = terminal block*
S4 = unf 1/2”

*
only for square housing version

Note: Not all code combinations are available. Please refer to alphabetical model index for the list of available models.

The company endeavours to continuously improve and renew its products; for this reason the technical data and contents of this catalogue may undergo variations without prior notice. For correct installation and use, the company can guarantee only the data indicated in the instruction manual supplied with the products.

SQUARE SERIES

There are millions of inductive sensors deployed in almost every area of factory automation. They detect metal objects contactless and are distinguished by a long operating life and extreme robustness. The Datalogic Automation inductive family provides the right solution to market requirements, offering a wide range of cylindrical and rectangular standard sensors with one or two set switching distances, available also with two, three or four wires connection models, short and standard housing and cable or connector version. Stainless steel version for both harsh environments or for FOOD applications.

HIGHLIGHTS

- Wide range: suitable practically for all the industrial applications
- Stainless steel versions: suitable for food applications
- 1X and 2 X operating distances: high detection reliability and precise reading
- 2, 3 or 4 wire connection: flexible connection system to meet customer applications

APPLICATIONS

Automatic warehouse

Automotive

Trasportation lines

Packaging lines

10÷30 V DC - 3 WIRES NPN OR PNP OUTPUT

- Range, 1,5mm - flush
- Cable or M8 quick connect models
- 200mA PNP
- Operation LED

WIRING DIAGRAMS CABLE VERSION

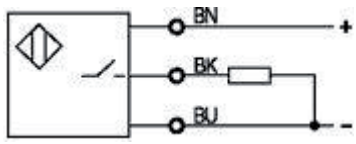

TECHNICAL DATA

	FLUSH
NOMINAL SWITCHING DISTANCE (Sn)	1,5 mm
NOMINAL VOLTAGE	10 ÷ 30 VDC
RESIDUAL RIPPLE	≤ 15%
HYSTERESIS	≤ 15%
MAX. OUTPUT CURRENT	200 mA
RESIDUAL CURRENT	≤ 80 µA
VOLTAGE DROP (Sensor ON)	< 2.5 V
OPERATION LED	Yellow
SWITCHING FREQUENCY	1.000 Hz
START UP DELAY	≤ 10 ms
REPEATABILITY	≤ 5%
SHORT CIRCUIT PROTECTION	Present (self-resetting)
ELECTRIC PROTECTIONS	Against polarity reversal inductive loads
TEMPERATURE LIMITS	- 25 ÷ +70 °C
PROTECTION DEGREE	IP 65
CABLE LENGTH	2 m
CABLE SECTION	3 x 0.14 mm^2
HOUSING MATERIAL	Gd Zn Al
WEIGHT - Cable output -	80 g
WEIGHT - M8 Connector output -	40 g

WIRING DIAGRAMS CONNECTOR VERSION

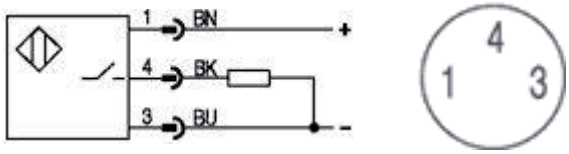

DIMENSIONS (mm)

CONFIGURATION WITH CABLE

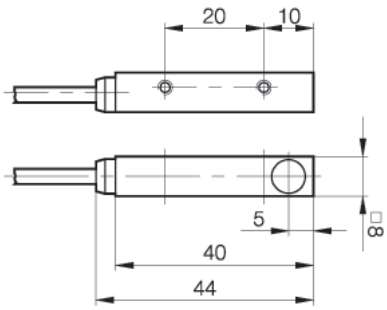

CONFIGURATION WITH CONNECTOR M8

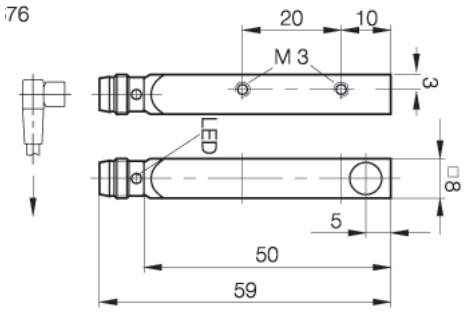

MODEL SELECTION AND ORDER INFORMATION

2MT CABLE

CODE	MODEL	RANGE	HOUSING	STEEL AISI316L	FLUSH	WIRES	NPN/PNP	NO/NC
95B060830	IS-88-Q1-03	1X	8x8 SQUARE		•	3	PNP	NO

M8 CONNECTOR

CODE	MODEL	RANGE	HOUSING	STEEL AISI316L	FLUSH	WIRES	NPN/PNP	NO/NC
95B060840	IS-88-Q1-S1	1X	8x8 SQUARE		•	3	PNP	NO

MODEL DESCRIPTION

IS - 04 - A 1 - 03

DIAMETER
04 = 4mm
05 = 5mm
65 = 6,5mm
08 = 8mm
12 = 12mm
18 = 18mm
30 = 30mm
40 = 40x40mm SQUARE
80 = 80x80mm SQUARE
88 = 8x8mm SQUARE

CONSTRUCTION
A= flush standard housing
B= flush short housing
BB= flush extra short housing
C= non flush standard housing
D= non flush short housing
E= flush standard housing double range
F= non flush standard housing double range
G= flush short housing double range
GG= flush extra short housing double range
H= non flush short housing double range
I= flush standard housing metal face
L= non flush standard housing metal face
M= flush short housing steel
N= non flush short housing steel
O= flush short housing steel double range
P= non flush short housing steel double range
Q= flush 8x8mm square housing
R= flush 8x8mm square housing double range
S= flush standard housing steel
T= non flush standard housing steel
U= flush standard housing steel double range
V= non flush standard housing steel double range
W= flush 40x40mm square housing
X= flush 40x40mm short square housing
Y= non flush 40x40mm square housing
Z= non flush 40x40mm short square housing

OUTPUT
1 = 10-30 Vdc PNP NO
2 = 10-30 Vdc PNP NC
3 = 10-30 Vdc NPN NO
4 = 10-30 Vdc NPN NC
5 = 10-30 Vdc PNP NO-NC
6 = 10-30 Vdc NPN NO-NC
7 = 24-230Vac – 2 wires NO
8 = 24-230Vac – 2 wires NC
9 = 10-30 Vdc - 2 wires NO-NC
0 = 10-30 Vdc - 4 wires
11 = Analog 4-20mA
12 = Analog 0-10V
13 = Analog 0-10V/4-20mA
14 = Analog 0-5V/1-5mA
15 = 20-250Vac/Vdc-2 and 3 wires NO
20 = NAMUR

CONNECTION
02 = Cable 500mm
03 = Cable 2mt
04 = Cable 700mm
S1 = M8 connector
S2 = M12 connector
S3 = terminal block*
S4 = unf 1/2”

*
only for square housing version

Note: Not all code combinations are available. Please refer to alphabetical model index for the list of available models.

The company endeavours to continuously improve and renew its products; for this reason the technical data and contents of this catalogue may undergo variations without prior notice. For correct installation and use, the company can guarantee only the data indicated in the instruction manual supplied with the products.

SQUARE SERIES

There are millions of inductive sensors deployed in almost every area of factory automation. They detect metal objects contactless and are distinguished by a long operating life and extreme robustness. The Datalogic Automation inductive family provides the right solution to market requirements, offering a wide range of cylindrical and rectangular standard sensors with one or two set switching distances, available also with two, three or four wires connection models, short and standard housing and cable or connector version. Stainless steel version for both harsh environments or for FOOD applications.

HIGHLIGHTS

- Wide range: suitable practically for all the industrial applications
- Stainless steel versions: suitable for food applications
- 1X and 2 X operating distances: high detection reliability and precise reading
- 2, 3 or 4 wire connection: flexible connection system to meet customer applications

APPLICATIONS

Automatic warehouse

Automotive

Trasportation lines

Packaging lines

ROTATING SENSING HEAD TYPE 5 POSITIONS

- 10÷30 V DC or 20÷250 V AC/DC input
- NPN/PNP 4 wires or NO/NC 2 wires output
- Short housing with M12 connector model

WIRING DIAGRAMS

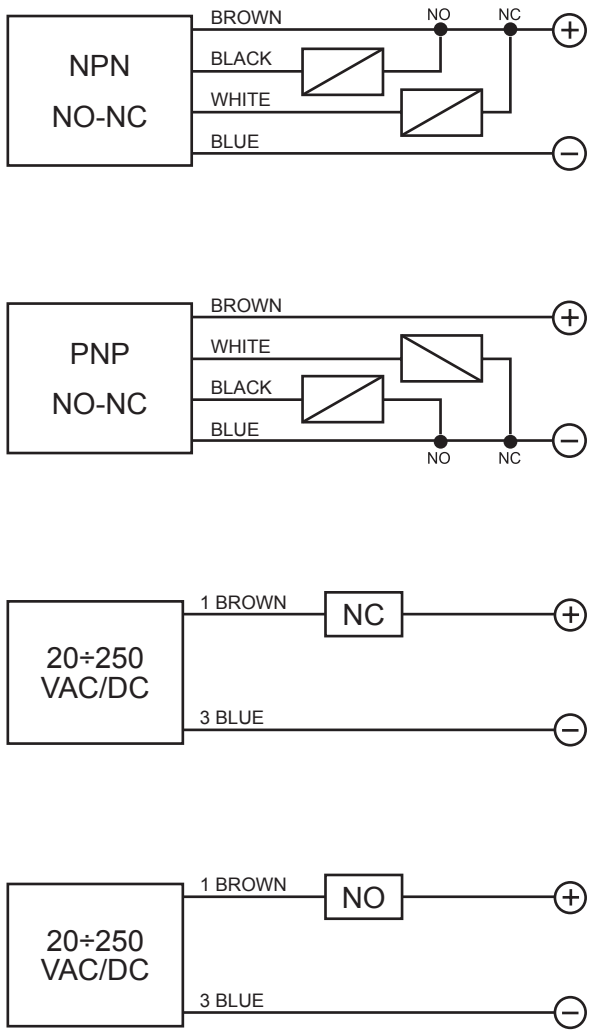

TECHNICAL DATA

	10 ÷ 30 V DC		20 ÷ 250 V AC/DC	
	FLUSH	NOT FLUSH	FLUSH	NOT FLUSH
NOMINAL SWITCHING DISTANCE	15 mm	30 mm	15 mm	30 mm
HOUSING MATERIAL	PBT RESIN		PBT RESIN	
OPERATING VOLTAGE	10 ÷ 30 VDC		20÷250 VAC, 50-60 Hz 20 ÷ 250 VDC	
RIPPLE	< 10%		DC RIPPLE < 10%	
NO LOAD CURRENT	< 10 mA		< 2.5 mA	
MAX LOAD CURRENT	200 mA		200 mA	
LEAKGE CURRENT	< 0.01mA		< 2.5 mA	
VOLTAGE DROP	< 1,5 V		≤ 10 VAC; ≤ 8 VDC	
SURGE CURRENT	-		2,2 A for 20 ms	
MIN. LOAD CURRENT	-		5 mA	
SWITCHING FREQUENCY	100 Hz		25 Hz AC; 40 Hz DC	
RESPONSE TIME	1 ms		10 ms	
SWITCHING HYSTERESIS	< 15% (Sr)		< 15% (Sr)	
REPEAT ACCURACY	< 1,0% (Sr)		< 1,0% (Sr)	
PROTECTION CATEGORY	IP 67		IP 67	
OPERATING TEMPERATURE	-25 °C / +75 °C		-25 °C / +75 °C	
TEMPERATURE DRIFT	<10% (Sr)		<10% (Sr)	
SHORT CIRCUIT PROTECTION	YES		YES	
OVERLOAD TRIP POINT	220 mA		-	
TIME DELAY BEFORE AVAILABILITY	< 10 ms		-	

CE c UL US LISTED

DIMENSIONS (mm)

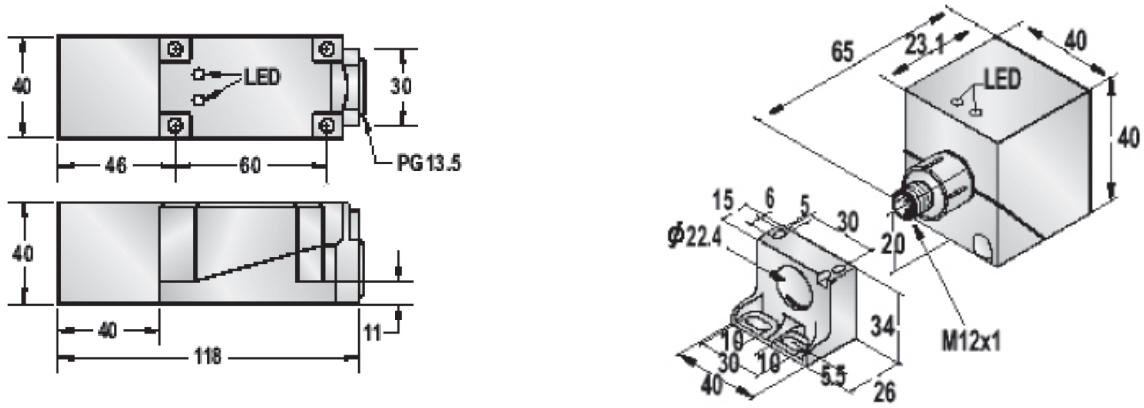

MODEL SELECTION AND ORDER INFORMATION

2MT CABLE

CODE	MODEL	RANGE	HOUSING	STEEL AISI316L	FLUSH	WIRES	NPN/PNP	NO/NC
95B065230	IS-40-W6-03	1X	40mm SQUARE		•	4	NPN	NO-NC
95B065240	IS-40-W5-03	1X	40mm SQUARE		•	4	PNP	NO-NC
95B065250	IS-40-W7-03	1X	40mm SQUARE		•	2	NO	
95B065260	IS-40-W8-03	1X	40mm SQUARE		•	2	NC	
95B065270	IS-40-Y6-03	1X	40mm SQUARE			4	NPN	NO-NC
95B065280	IS-40-Y5-03	1X	40mm SQUARE			4	PNP	NO-NC
95B065290	IS-40-Y7-03	1X	40mm SQUARE			2	NO	
95B065300	IS-40-Y8-03	1X	40mm SQUARE			2	NC	

M8 CONNECTOR

CODE	MODEL	RANGE	HOUSING	STEEL AISI316L	FLUSH	WIRES	NPN/PNP	NO/NC
95B065310	IS-40-X6-S2	1X	40mm SQUARE SHORT		•	4	NPN	NO-NC
95B065320	IS-40-X5-S2	1X	40mm SQUARE SHORT		•	4	PNP	NO-NC

MODEL DESCRIPTION

IS - 04 - A 1 - 03

DIAMETER
04 = 4mm
05 = 5mm
65 = 6,5mm
08 = 8mm
12 = 12mm
18 = 18mm
30 = 30mm
40 = 40x40mm SQUARE
80 = 80x80mm SQUARE
88 = 8x8mm SQUARE

CONSTRUCTION
A= flush standard housing
B= flush short housing
BB= flush extra short housing
C= non flush standard housing
D= non flush short housing
E= flush standard housing double range
F= non flush standard housing double range
G= flush short housing double range
GG= flush extra short housing double range
H= non flush short housing double range
I= flush standard housing metal face
L= non flush standard housing metal face
M= flush short housing steel
N= non flush short housing steel
O= flush short housing steel double range
P= non flush short housing steel double range
Q= flush 8x8mm square housing
R= flush 8x8mm square housing double range
S= flush standard housing steel
T= non flush standard housing steel
U= flush standard housing steel double range
V= non flush standard housing steel double range
W= flush 40x40mm square housing
X= flush 40x40mm short square housing
Y= non flush 40x40mm square housing
Z= non flush 40x40mm short square housing

OUTPUT
1 = 10-30 Vdc PNP NO
2 = 10-30 Vdc PNP NC
3 = 10-30 Vdc NPN NO
4 = 10-30 Vdc NPN NC
5 = 10-30 Vdc PNP NO-NC
6 = 10-30 Vdc NPN NO-NC
7 = 24-230Vac – 2 wires NO
8 = 24-230Vac – 2 wires NC
9 = 10-30 Vdc - 2 wires NO-NC
0 = 10-30 Vdc - 4 wires
11 = Analog 4-20mA
12 = Analog 0-10V
13 = Analog 0-10V/4-20mA
14 = Analog 0-5V/1-5mA
15 = 20-250Vac/Vdc-2 and 3 wires NO
20 = NAMUR

CONNECTION
02 = Cable 500mm
03 = Cable 2mt
04 = Cable 700mm
S1 = M8 connector
S2 = M12 connector
S3 = terminal block*
S4 = unf 1/2”

*
only for square housing version

Note: Not all code combinations are available. Please refer to alphabetical model index for the list of available models.

The company endeavours to continuously improve and renew its products; for this reason the technical data and contents of this catalogue may undergo variations without prior notice. For correct installation and use, the company can guarantee only the data indicated in the instruction manual supplied with the products.

CAPACITIVE SENSORS

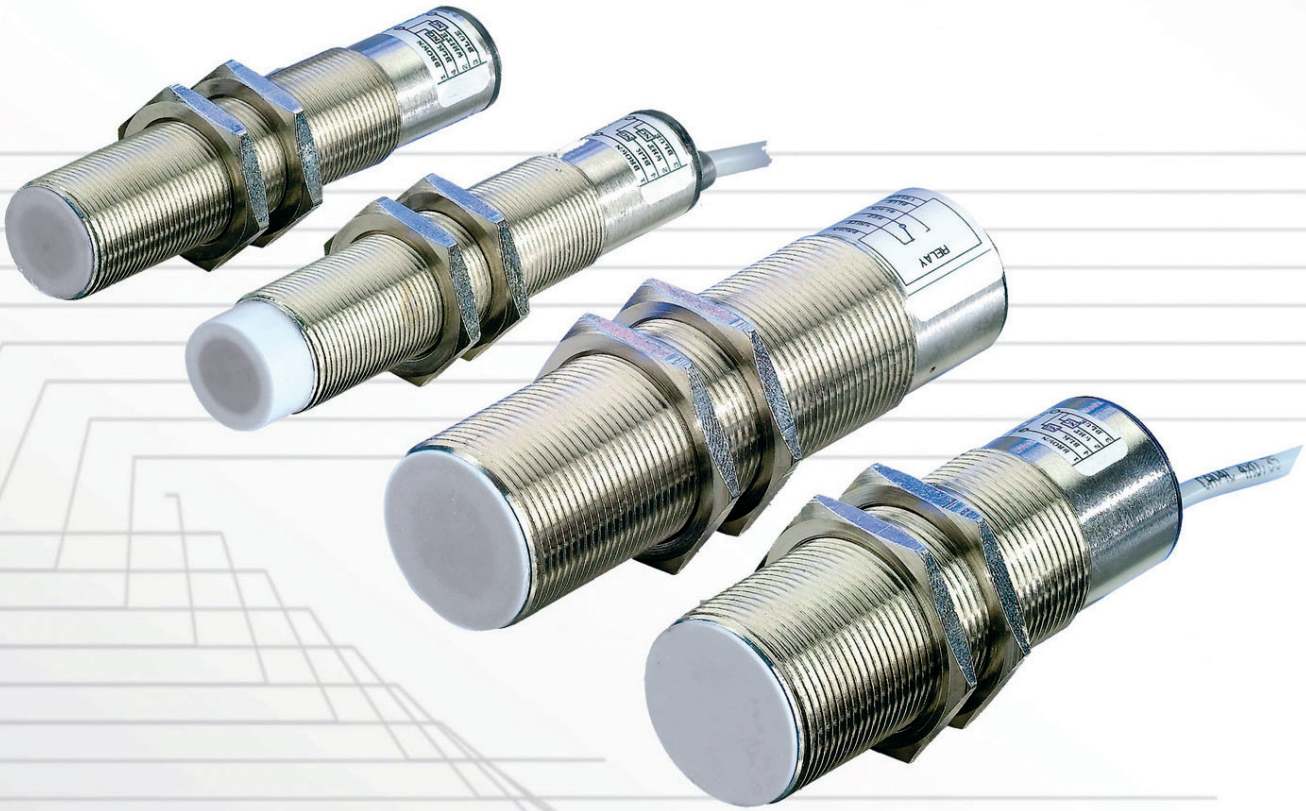

M18 SERIES

Capacitive sensors are designed to provide flexibility and reliability and to :
- Detect metallic and non-metallic objects independent of color or texture
- “Look through” non-metallic walls or containers
- Detect very small metal parts or thin wires.

The Datalogic Automation capacitive family provides the right solution to market requirements, offering a wide range of cylindrical metal and plastic housing sensors with one or two set switching distances, available also with two, three or four wires connection models, short and standard housing and cable or connector version.
Datalogic’s capacitive sensor family can solve applications that are difficult to accomplish with traditional inductives or photoelectrics.

HIGHLIGHTS

- Wide range: suitable practically for all the industrial applications
- Plastic and metal housing : suitable for covering also applications in harsh enviroments
- 1X and 2 X operating distances: high detection reliability and precise reading
- 2, 3 or 4 wire connection: flexible connection system to meet customer applications

APPLICATIONS

Automatic warehouse

Automotive

Trasportation lines

Packaging lines

12÷30 V DC - 4 WIRES NPN OR PNP OUTPUT

- Metal housing
- Adjustable range, 9-turn trimmer
- Nickel-plated brass
- High noise immunity
- High temperature stability

WIRING DIAGRAMS

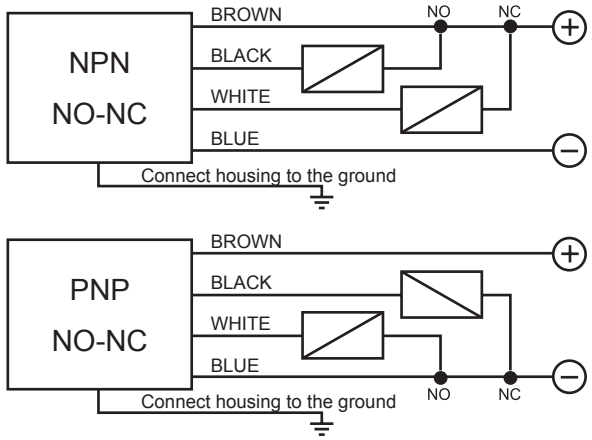

TECHNICAL DATA

	FLUSH	NON FLUSH
NOMINAL SWITCHING DISTANCE (Sn)	1÷5 mm	1÷10 mm
NOMINAL VOLTAGE	12 ÷ 30 VDC (-15/+10%)	
RESIDUAL RIPPLE	≤ 10%	
HYSTERESIS	Depending on the sensing distance	
MAX. CURRENT OUTPUT	200 mA	
ABSORPTION AT 24 VDC	≤ 20 mA	
VOLTAGE DROP (Sensor ON)	≤ 1.8 V (I = 100 mA)	
OPERATION LED	Yellow	
SENSITIVITY ADJUSTMENT	Trimmer 9 turns	
SWITCHING FREQUENCY	10 Hz	
START UP DELAY	≤ 100 ms	
REPEATABILITY (at even temperature)	≤ 5%	
SHORT CIRCUIT PROTECTION	Present	
ELECTRIC PROTECTIONS	Against polarity reversal - inductive loads	
TEMPERATURE LIMITS	- 25 ÷ +70 °C	
PROTECTION DEGREE	IP 67	
CABLE LENGTH	2 m	
CABLE SECTION	4 x 0.25 mm2	
HOUSING MATERIAL	Nickel-plated brass	
WEIGHT - cable output -	160 g	
WEIGHT - K2 connector output -	120 g	

CONNECTION WITH CONNECTOR M8

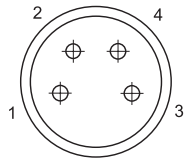

View of quadripole male connector

CONTACTS CONFIGURATION

Output	Contacts numbers			
	1	2	3	4
NPN/PNP NO+NC	+	NC	–	NO

SENSITIVITY ADJUSTMENT

The sensitivity adjustment must be done when the sensor is installed in a definite and steady position. The regulation must be done in a position half way between minimum and maximum, because, being air dielectric, a strong humidity variation could cause, if the regulation is very light, nuisance tripping. The sensing distance of the sensor depends on the kind of material to detect and on its dimensions (see table about reduction factors). The distance could change according to temperature variations. To increase the sensitivity twist the trimmer clock-wise, to decrease do it anti clock-wise.

CE c UL US LISTED

DIMENSIONS (mm)

CONFIGURATION WITH CABLE

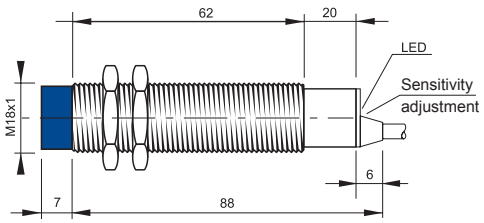

CONFIGURATION WITH CONNECTOR M8 (K2)

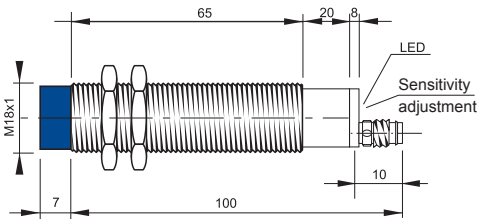

Ø 18 BACK VIEW

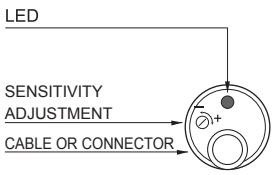

Note: the front part in blue refers to non flush models.

20÷250 V AC - 2 WIRES

- Wide input voltage, 20-250 V AC
- Models with trimmer pot
- Adjustable range

TECHNICAL DATA

	FLUSH	NON FLUSH
NOMINAL SWITCHING DISTANCE (Sn)	2÷8 mm	2÷15 mm
NOMINAL VOLTAGE	20 ÷ 250 VAC (-15 / +10%)	
NET FREQUENCY	50 ÷ 60 Hz	
HYSTERESIS	< 15 % (depending on the sensing distance)	
MAX. OUTPUT CURRENT	300 mA	
ABSORPTION	2.5 mA	
LEAKAGE CURRENT	< 2.5 mA	
SURGE CURRENT	5 A	
OPERATION LED	Present	
SENSITIVITY ADJUSTMENT	Trimmer multi-turns	
SWITCHING FREQUENCY	25 Hz	
REPEATABILITY (at even temperature)	≤ 5%	
TEMPERATURE LIMITS	- 25 ÷ +70 °C	
PROTECTION DEGREE	IP 67	
HOUSING MATERIAL	PBT resin	
WEIGHT (Approximately)	80 g	

CE c UL us LISTED

WIRING DIAGRAMS

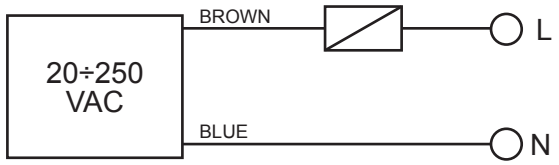

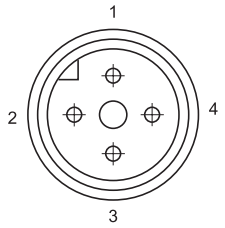

View of quadripole male connector

CONTACTS CONFIGURATION

Available	Contacts numbers			
	1	2	3	4
NO	L		N	

SENSITIVITY ADJUSTMENT

The sensitivity adjustment must be done when the sensor is installed in a definite and steady position. The regulation must be done in a position half way between minimum and maximum, because, being air dielectric, a strong humidity variation could cause, if the regulation is very light, nuisance tripping. The sensing distance of the sensor depends on the kind of material to detect and on its dimensions (see table about reduction factors). The distance could change according to temperature variations. To increase the sensitivity twist the trimmer clock-wise, to decrease do it anti clock-wise.

DIMENSIONS (mm)

FLUSH

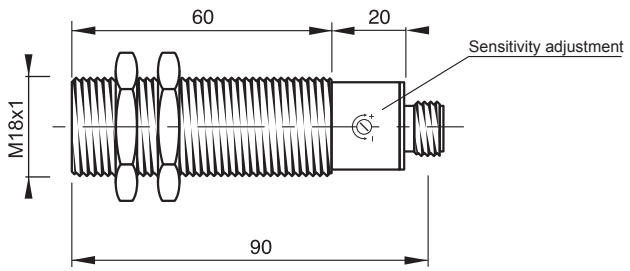

NON FLUSH

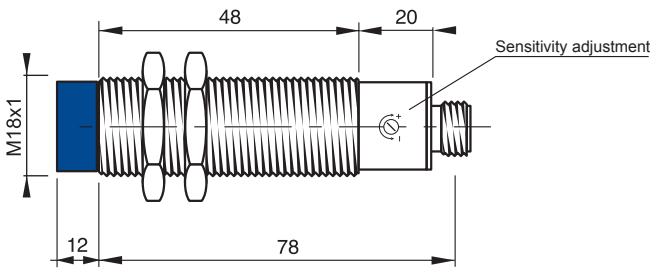

MODEL SELECTION AND ORDER INFORMATION

2MT CABLE

CODE	MODEL	RANGE	HOUSING	STEEL AISI316L	FLUSH	WIRES	NPN/PNP	NO/NC
958901160	CS07	5mm	METAL	•	4	NPN	NO-NC	NO
958901020	CS08	5mm	METAL	•	4	PNP	NO-NC	
958901100	CS13	10mm	METAL		4	NPN	NO-NC	
958901120	CS14	10mm	METAL		4	PNP	NO-NC	

M8 CONNECTOR

CODE	MODEL	RANGE	HOUSING	STEEL AISI316L	FLUSH	WIRES	NPN/PNP	NO/NC
958901000	CS07K2	5mm	METAL	•	4	NPN	NO-NC	NO
958901040	CS08K2	5mm	METAL	•	4	PNP	NO-NC	
958901250	CS13K2	10mm	METAL		4	NPN	NO-NC	
958901270	CS14K2	10mm	METAL		4	PNP	NO-NC	

M12 CONNECTOR

CODE	MODEL	RANGE	HOUSING	STEEL AISI316L	FLUSH	WIRES	NPN/PNP	NO/NC
958901380	CSP40K4	8mm	PLASTIC	•	2		NO	NO
958901390	CSP41K4	15mm	PLASTIC		2		NO	

ACCESSORY SELECTION AND ORDER INFORMATION

CODE	MODEL
95ACC3340	ST1218
95ACC3350	ST1830

MODEL DESCRIPTION

CS P 07 K2

HOUSING
P= plastic

DIAMETER AND CONNECTION
07 = Ø 18 NPN NO-NC, SHIELDED 5MM
08 = Ø 18 PNP NO-NC, SHIELDED 5MM
09 = Ø 30 NPN NO-NC, SHIELDED 15MM
10 = Ø 30 PNP NO-NC, SHIELDED 15MM
13 = Ø 18 NPN NO-NC, NOT SHIELDED 10MM
14 = Ø 18 PNP NO-NC, NOT SHIELDED 10MM
15 = Ø 30 NPN NO-NC, NOT SHIELDED 25MM
16 = Ø 30 PNP NO-NC, NOT SHIELDED 25MM
31 = Ø 30 RELAY OUTPUT, SHIELDED 20MM
32 = Ø 30 RELAY OUTPUT, NOT SHIELDED 30MM
40 = Ø 18 NO, SHIELDED 8MM
41 = Ø 18 NO, NOT SHIELDED 8MM
50 = Ø 30 NO, SHIELDED 20MM
51 = Ø 30 NO, NOT SHIELDED 20MM

CONNECTION AND OUTPUT
K2 = M8 CONNECTOR 4 POLES
K4 = M12 CONNECTOR 4 POLES
TD = RELAY OUTPUT - DEACTIVATING DELAY
TE = RELAY OUTPUT - ACTIVATING DELAY WIRES NO
20 = NAMUR

Note: Not all code combinations are available. Please refer to alphabetical model index for the list of available models.

The company endeavours to continuously improve and renew its products; for this reason the technical data and contents of this catalogue may undergo variations without prior notice. For correct installation and use, the company can guarantee only the data indicated in the instruction manual supplied with the products.

M30 SERIES

Capacitive sensors are designed to provide flexibility and reliability and to :
- Detect metallic and non-metallic objects independent of color or texture
- “Look through” non-metallic walls or containers
- Detect very small metal parts or thin wires.

The Datalogic Automation capacitive family provides the right solution to market requirements, offering a wide range of cylindrical metal and plastic housing sensors with one or two set switching distances, available also with two, three or four wires connection models, short and standard housing and cable or connector version.
Datalogic’s capacitive sensor family can solve applications that are difficult to accomplish with traditional inductives or photoelectrics.

HIGHLIGHTS

- Wide range: suitable practically for all the industrial applications
- Plastic and metal housing : suitable for covering also applications in harsh enviroments
- 1X and 2 X operating distances: high detection reliability and precise reading
- 2, 3 or 4 wire connection: flexible connection system to meet customer applications

APPLICATIONS

Automatic warehouse

Automotive

Trasportation lines

Packaging lines

12÷30 V DC - 4 WIRES NPN OR PNP OUTPUT

- Metal housing
- Adjustable range, 9-turn trimmer
- Nickel-plated brass
- High noise immunity
- High temperature stability

WIRING DIAGRAMS

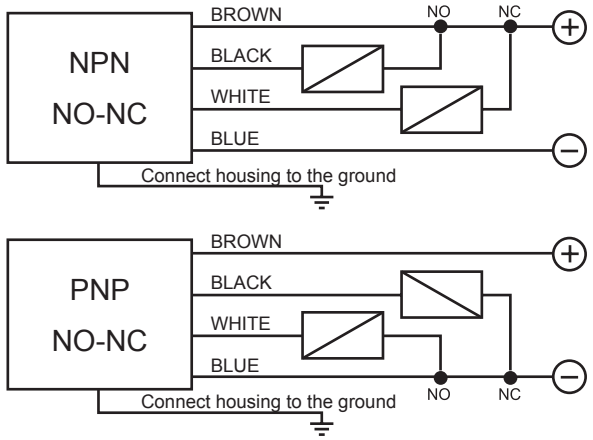

TECHNICAL DATA

	FLUSH	NON FLUSH
NOMINAL SWITCHING DISTANCE (Sn)	1÷15 mm	1÷25 mm
NOMINAL VOLTAGE	12 ÷ 30 VDC (-15/+10%)	
RESIDUAL RIPPLE	≤ 10%	
HYSTERESIS	Depending on the sensing distance	
MAX. CURRENT OUTPUT	200 mA	
ABSORPTION AT 24 VDC	≤ 20 mA	
VOLTAGE DROP (Sensor ON)	≤ 1.8 V (I = 100 mA)	
OPERATION LED	Yellow	
SENSITIVITY ADJUSTMENT	Trimmer 9 turns	
SWITCHING FREQUENCY	10 Hz	
START UP DELAY	≤ 100 mS	
REPEATABILITY (at even temperature)	≤ 5%	
SHORT CIRCUIT PROTECTION	Present	
ELECTRIC PROTECTIONS	Against polarity reversal - inductive loads	
TEMPERATURE LIMITS	- 25 ÷ +70 °C	
PROTECTION DEGREE	IP 67	
CABLE LENGTH	2 m	
CABLE SECTION	4 x 0.25 mm2	
HOUSING MATERIAL	Nickel-plated brass	
WEIGHT - cable output -	250 g	
WEIGHT - K2 connector output -	210 g	

CONNECTION WITH CONNECTOR M8

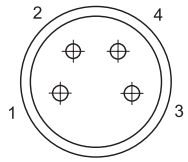

View of quadripole male connector

CONTACTS CONFIGURATION

Output	Contacts numbers			
	1	2	3	4
NPN/PNP NO+NC	+	NC	–	NO

SENSITIVITY ADJUSTMENT

The sensitivity adjustment must be done when the sensor is installed in a definite and steady position. The regulation must be done in a position half way between minimum and maximum, because, being air dielectric, a strong humidity variation could cause, if the regulation is very light, nuisance tripping. The sensing distance of the sensor depends on the kind of material to detect and on its dimensions (see table about reduction factors). The distance could change according to temperature variations. To increase the sensitivity twist the trimmer clock-wise, to decrease do it anti clock-wise.

CE c UL US LISTED

DIMENSIONS (mm)

CONFIGURATION WITH CABLE

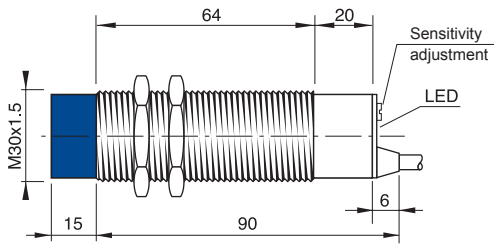

CONFIGURATION WITH CONNECTOR K

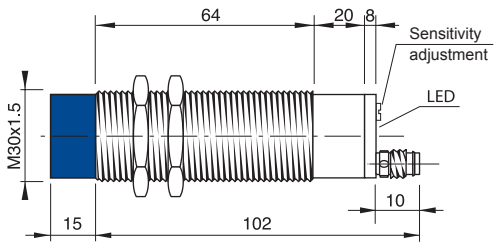

Ø 30 BACK VIEW

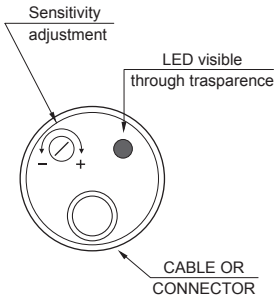

Note: the front part in blue refers to non flush models.

18÷230 V AC/DC WITH TIMER RELAY OUTPUT

- Metal housing
- Relay SPDT output: 3A 30VAC, 1A 220VAC
- Models with 9-turn pot
- Adjustable range
- High noise immunity
- High temperature stability

WIRING DIAGRAMS

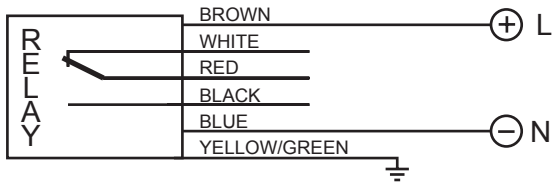

TECHNICAL DATA

	FLUSH	NON FLUSH
NOMINAL SWITCHING DISTANCE (Sn)	1÷20 mm	2÷30 mm
NOMINAL VOLTAGE	18 ÷ 230 VAC-DC (-15/+10%)	
NET FREQUENCY	50 ÷ 60 Hz	
HYSTERESIS	Depending on the sensing distance	
OUTPUT	Relay (10 x106 ops. min.)	
MAX. CURRENT OUTPUT	3A 30VAC - 1A 220VAC (90 W, 360 VA)	
ABSORPTION	2.5 VA	
OPERATION LED	Yellow	
SENSITIVITY ADJUSTMENT	Trimmer 9 turns	
START UP DELAY	≤ 300 ms	
SWITCHING FREQUENCY	10 Hz	
REPEATABILITY (at even temperature)	≤ 5%	
TEMPERATURE LIMITS	- 25 ÷ +70 °C	
PROTECTION DEGREE	IP 65	
CABLE LENGTH	2 m	
CABLE SECTION	6 x 0.30 mm²	
HOUSING MATERIAL	Nickel-plated brass	
WEIGHT (Approximately)	250 g	

CE c UL US LISTED

TIME DELAY

To regulate the sensitivity of these models, reset the time delay trimmer before.

The available range of delay is:

1 SEC. + 5 MIN.

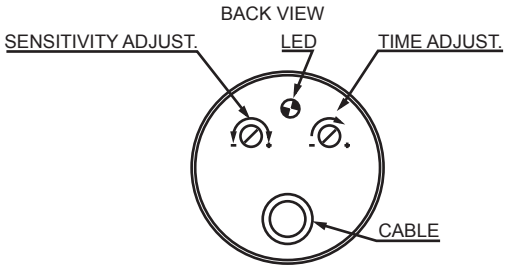

SENSITIVITY ADJUSTMENT

The sensitivity adjustment must be done when the sensor is installed in a definite and steady position. The regulation must be done in a position half way between minimum and maximum, because, being air dielectric, a strong humidity variation could cause, if the regulation is very light, nuisance tripping. The sensing distance of the sensor depends on the kind of material to detect and on its dimensions (see table about reduction factors). The distance could change according to temperature variations. To increase the sensitivity twist the trimmer clock-wise, to decrease do it anti clock-wise.

DIMENSIONS (mm)

FLUSH

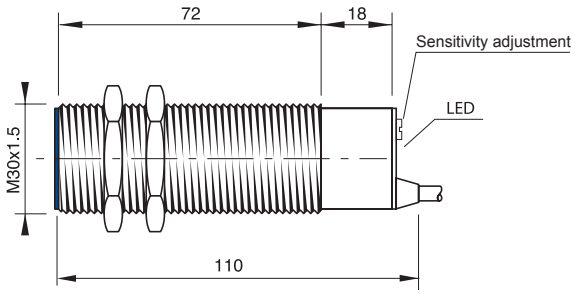

NON FLUSH

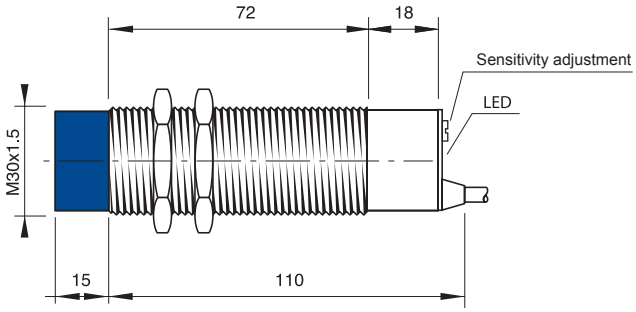

20÷250 V AC - 2 WIRES

- Wide input voltage, 20-250 V AC
- Models with multi-turn pot
- Adjustable range

TECHNICAL DATA

	FLUSH	NON FLUSH
NOMINAL SWITCHING DISTANCE (Sn)	2÷20 mm	2÷30 mm
NOMINAL VOLTAGE	20 ÷ 250 VAC (-15 / +10%)	
NET FREQUENCY	50 ÷ 60 Hz	
HYSTERESIS	< 15 % (depending on the sensing distance)	
MAX. OUTPUT CURRENT	300 mA	
ABSORPTION	2.5 mA	
LEAKAGE CURRENT	< 2.5 mA	
SURGE CURRENT	5 A	
OPERATION LED	Present	
SENSITIVITY ADJUSTMENT	Trimmer multi-turns	
SWITCHING FREQUENCY	25 Hz	
REPEATABILITY (at even temperature)	≤ 5%	
TEMPERATURE LIMITS	- 25 ÷ +70 °C	
PROTECTION DEGREE	IP 67	
HOUSING MATERIAL	PBT resin	
WEIGHT (Approximately)	200 g	

CE c UL US LISTED

WIRING DIAGRAMS

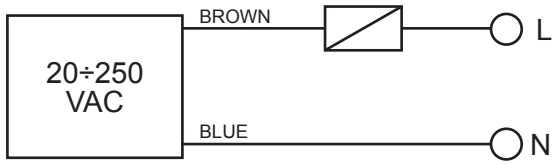

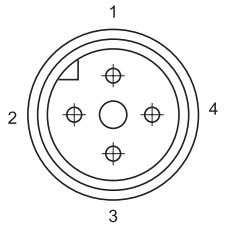

View of quadripole male connector

CONTACTS CONFIGURATION

Available	Contacts numbers			
	1	2	3	4
NO	L		N	

SENSITIVITY ADJUSTMENT

The sensitivity adjustment must be done when the sensor is installed in a definite and steady position. The regulation must be done in a position half way between minimum and maximum, because, being air dielectric, a strong humidity variation could cause, if the regulation is very light, nuisance tripping. The sensing distance of the sensor depends on the kind of material to detect and on its dimensions (see table about reduction factors). The distance could change according to temperature variations. To increase the sensitivity twist the trimmer clock-wise, to decrease do it anti clock-wise.

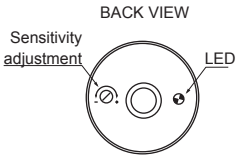

DIMENSIONS (mm)

FLUSH

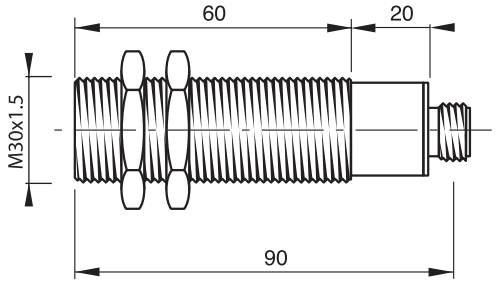

NON FLUSH

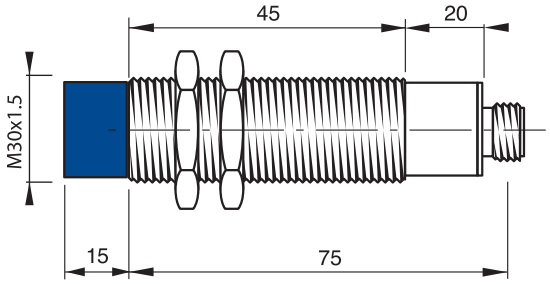

MODEL SELECTION AND ORDER INFORMATION

2MT CABLE

CODE	MODEL	RANGE	HOUSING	FLUSH	WIRES	NPN/PNP/RELAY	NO/NC
958901180	CS09	15mm	METAL	•	4	NPN	NO-NC
958901060	CS10	15mm	METAL	•	4	PNP	NO-NC
958901200	CS15	25mm	METAL		4	NPN	NO-NC
958901140	CS16	25mm	METAL		4	PNP	NO-NC
958901150	CS31	20mm	METAL	•		•	
958901350	CS31TD5	20mm	METAL	•		•	
958901210	CS31TE5	20mm	METAL	•		•	
958901220	CS32	20mm	METAL			•	
958901360	CS32TD5	30mm	METAL			•	
958901370	CS32TE5	30mm	METAL			•	
958901210	CS31TE5	20mm	METAL	•		•	
958901220	CS32	20mm	METAL			•	
958901360	CS32TD5	30mm	METAL			•	
958901370	CS32TE5	30mm	METAL			•	

M8 CONNECTOR

CODE	MODEL	RANGE	HOUSING	FLUSH	WIRES	NPN/PNP/RELAY	NO/NC
958901400	CSP50K4	20mm	PLASTIC	•	2		NO
958901410	CSP51K4	30mm	PLASTIC		2		NO
958901300	CS15K2	25mm	METAL		4	NPN	NO-NC
958901330	CS16K2	25mm	METAL		4	PNP	NO-NC

M12 CONNECTOR

CODE	MODEL	RANGE	HOUSING	FLUSH	WIRES	NPN/PNP/RELAY	NO/NC
958901400	CSP50K4	20mm	PLASTIC	•	2		NO
958901410	CSP51K4	30mm	PLASTIC		2		NO

ACCESSORY SELECTION AND ORDER INFORMATION

CODE	MODEL
95ACC3350	ST1830

MODEL DESCRIPTION

CS P 07 K2

HOUSING
P= plastic

DIAMETER AND CONNECTION
07 = Ø 18 NPN NO-NC, SHIELDED 5MM
08 = Ø 18 PNP NO-NC, SHIELDED 5MM
09 = Ø 30 NPN NO-NC, SHIELDED 15MM
10 = Ø 30 PNP NO-NC, SHIELDED 15MM
13 = Ø 18 NPN NO-NC, NOT SHIELDED 10MM
14 = Ø 18 PNP NO-NC, NOT SHIELDED 10MM
15 = Ø 30 NPN NO-NC, NOT SHIELDED 25MM
16 = Ø 30 PNP NO-NC, NOT SHIELDED 25MM
31 = Ø 30 RELAY OUTPUT, SHIELDED 20MM
32 = Ø 30 RELAY OUTPUT, NOT SHIELDED 30MM
40 = Ø 18 NO, SHIELDED 8MM
41 = Ø 18 NO, NOT SHIELDED 8MM
50 = Ø 30 NO, SHIELDED 20MM
51 = Ø 30 NO, NOT SHIELDED 20MM

CONNECTION AND OUTPUT
K2 = M8 CONNECTOR 4 POLES
K4 = M12 CONNECTOR 4 POLES
TD = RELAY OUTPUT - DEACTIVATING DELAY
TE = RELAY OUTPUT - ACTIVATING DELAY WIRES NO
20 = NAMUR

Note: Not all code combinations are available. Please refer to alphabetical model index for the list of available models.

The company endeavours to continuously improve and renew its products; for this reason the technical data and contents of this catalogue may undergo variations without prior notice. For correct installation and use, the company can guarantee only the data indicated in the instruction manual supplied with the products.

MAGNETIC SENSORS

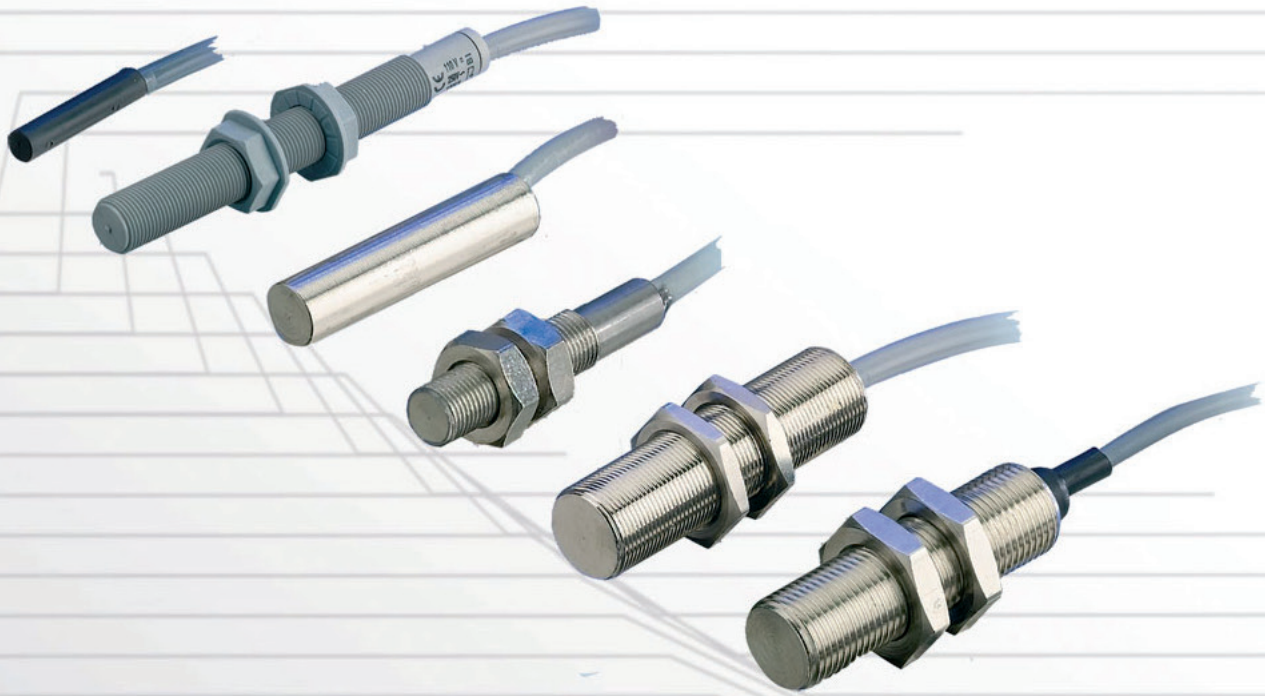

HALL EFFECT SERIES

Magnetic proximity sensors are ideally suited for harsh environments as they are insensitive to dust, heat and vibrations. They are typically used where other sensors have reached their technological limits.
The Datalogic Automation magnetic family provides the right solution to market requirements, offering a wide range of cylindrical sensors based on REED and HALL EFFECT, available also with two, three or four wires connection models, short and standard housing and cable or connector version. A complete range of Magnets complete the offer.

HIGHLIGHTS

- Wide range: suitable practically for all the industrial applications
- Plastic and metal housing : suitable for covering also applications in harsh enviroments
- REED and HALL EFFECT models
- 2, 3 or 4 wire connection: flexible connection system to meet customer applications

APPLICATIONS

Automatic warehouse

Automotive

Trasportation lines

Packaging lines

12÷30 V DC - 3 WIRES - PNP OUTPUT

- Fast 50 ms ON/OFF
- Sensing models: Front end travel
  Bilateral side travel
- Choice of magnet targets

WIRING DIAGRAMS

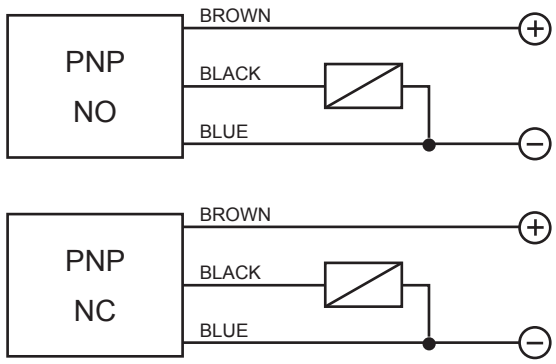

TECHNICAL DATA

MAGNETIC FLUX (Gauss)	
• SENSOR ON	≥ 25 (Tip. 15 at 25°C)
• SENSORE OFF	≤ 5 (Tip. 11 at 25°C)
• HYSTERESIS	Max. diff. 7 (Tip. 4 at 25°C)
NOMINAL VOLTAGE	12 ÷ 30 VDC (-15/+10%)
RESIDUAL RIPPLE	≤ 10%
MAX. CURRENT OUTPUT	200 mA
ABSORPTION AT 30 VDC	≤ 10 mA
VOLTAGE DROP (Sensor ON)	< 1.8 V
YELLOW LED	Output indicator
GREEN LED	Supply indicator
SWITCHING FREQUENCY (max.)	10 kHz
TIME RESPONSE	100 ms
START UP DELAY	50 ms
SHORT CIRCUIT PROTECTION	Present (self-resetting)
ELECTRIC PROTECTIONS	Against reversal polarity - inductive loads
TEMPERATURE LIMITS	- 20 ÷ +60 °C
PROTECTION DEGREE	IP 67
CABLE LENGTH	2 m
CABLE SECTION	3 x 0.25 mm²
HOUSING MATERIAL	Nickel-plated brass
WEIGHT (Approximately)	50 g

HALL EFFECT SENSOR/MAGNET SWITCHING DISTANCE (MM)

DIAMETER 9

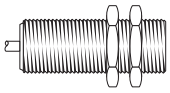

Distance	Hysteresis	
33	4	MG01
30	4	MG02
18	5	MG03
41	6,5	MG04
35	7	MG05

WARNING: The data specified in this table have an approximate value because they depend on the magnet position, on the material on which it is applied (ferromagnetic or not) and because they are related to the magnet during the frontal approach.

DIMENSIONS (mm)

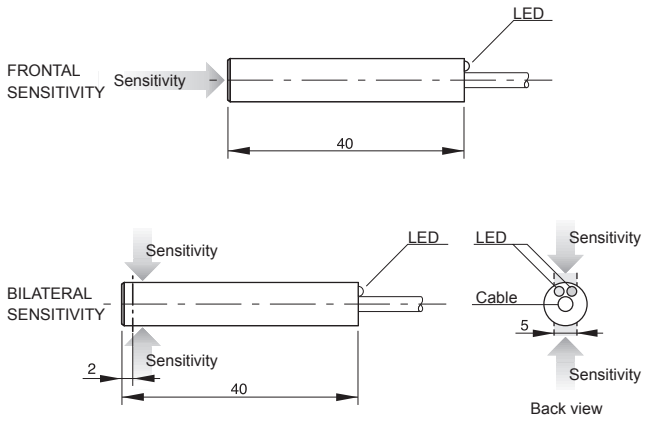

MAGNETS DIMENSIONS (MM)

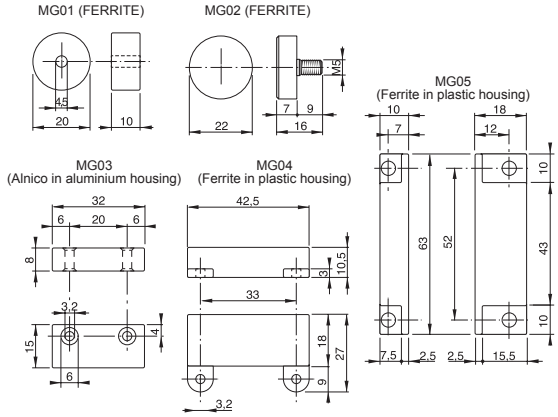

12÷30 V DC - 3 WIRES - PNP OUTPUT

- Fast 50 ms ON/OFF
- Sensing models: Front end travel
  Bilateral side travel
- Choice of magnet targets

WIRING DIAGRAMS

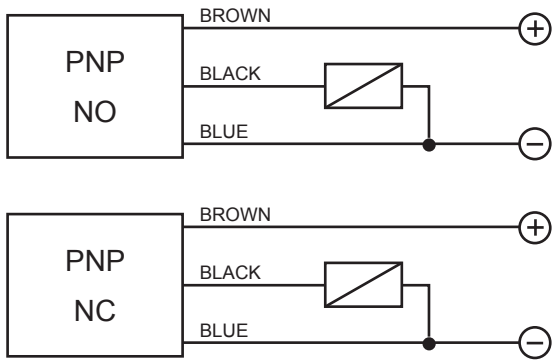

TECHNICAL DATA

MAGNETIC FLUX (Gauss)	
• SENSOR ON	≥ 25 (Tip. 15 at 25°C)
• SENSORE OFF	≤ 5 (Tip. 11 at 25°C)
• HYSTERESIS	Max. diff. 7 (Tip. 4 at 25°C)
NOMINAL VOLTAGE	12 ÷ 30 VDC (-15/+10%)
RESIDUAL RIPPLE	≤ 10%
MAX. CURRENT OUTPUT	200 mA
ABSORPTION AT 30 VDC	≤ 10 mA
VOLTAGE DROP (Sensor ON)	< 1.8 V
YELLOW LED	Output indicator
GREEN LED	Supply indicator
SWITCHING FREQUENCY (max.)	10 kHz
TIME RESPONSE	100 ms
START UP DELAY	50 ms
SHORT CIRCUIT PROTECTION	Present (self-resetting)
ELECTRIC PROTECTIONS	Against reversal polarity - inductive loads
TEMPERATURE LIMITS	- 20 ÷ +60 °C
PROTECTION DEGREE	IP 67
CABLE LENGTH	2 m
CABLE SECTION	3 x 0.25 mm²
HOUSING MATERIAL	Nickel-plated brass
WEIGHT (Approximately)	110 g

HALL EFFECT SENSOR/MAGNET SWITCHING DISTANCE (MM)

DIAMETER 12

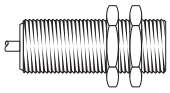

Distance	Hysteresis	
33	4	MG01
30	4	MG02
18	5	MG03
41	6,5	MG04
35	7	MG05

WARNING: The data specified in this table have an approximate value because they depend on the magnet position, on the material on which it is applied (ferromagnetic or not) and because they are related to the magnet during the frontal approach.

DIMENSIONS (mm)

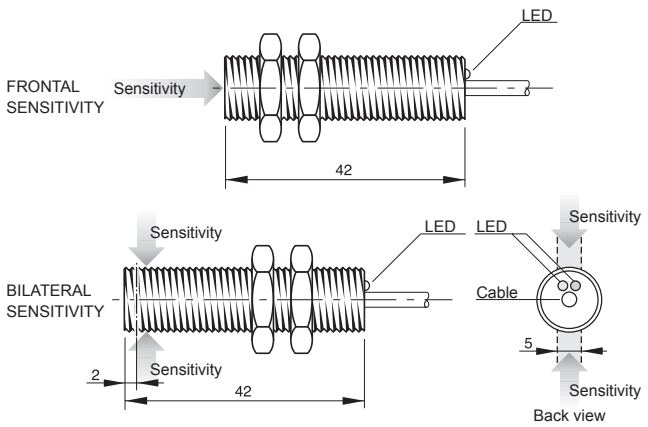

MAGNETS DIMENSIONS (MM)

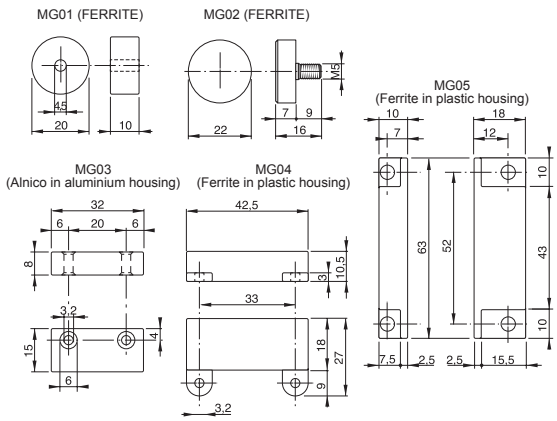

12÷30 V DC - 3 WIRES - PNP OUTPUT

- Fast 50 ms ON/OFF
- Sensing models: Front end travel
  Bilateral side travel
- Choice of magnet targets

WIRING DIAGRAMS

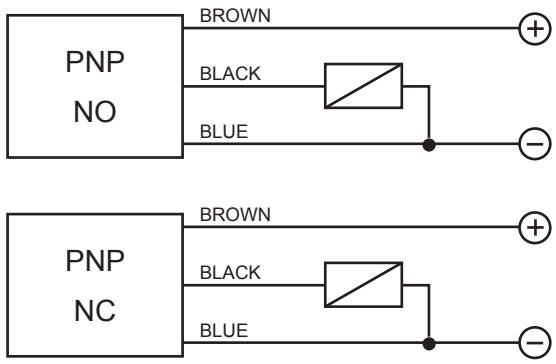

TECHNICAL DATA

MAGNETIC FLUX (Gauss)	
• SENSOR ON	≥ 25 (Tip. 15 at 25°C)
• SENSORE OFF	≤ 5 (Tip. 11 at 25°C)
• HYSTERESIS	Max. diff. 7 (Tip. 4 at 25°C)
NOMINAL VOLTAGE	12 ÷ 30 VDC (-15/+10%)
RESIDUAL RIPPLE	≤ 10%
MAX. CURRENT OUTPUT	200 mA
ABSORPTION AT 30 VDC	≤ 10 mA
VOLTAGE DROP (Sensor ON)	< 1.8 V
YELLOW LED	Output indicator
GREEN LED	Supply indicator
SWITCHING FREQUENCY (max.)	10 kHz
TIME RESPONSE	100 ms
START UP DELAY	50 ms
SHORT CIRCUIT PROTECTION	Present (self-resetting)
ELECTRIC PROTECTIONS	Against reversal polarity - inductive loads
TEMPERATURE LIMITS	- 20 ÷ +60 °C
PROTECTION DEGREE	IP 67
CABLE LENGTH	2 m
CABLE SECTION	3 x 0.25 mm²
HOUSING MATERIAL	Nickel-plated brass
WEIGHT (Approximately)	145 g

HALL EFFECT SENSOR/MAGNET SWITCHING DISTANCE (MM)

DIAMETER 18

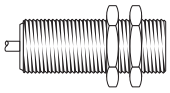

Distance	Hysteresis	
33	4	MG01
30	4	MG02
18	5	MG03
41	6,5	MG04
35	7	MG05

WARNING: The data specified in this table have an approximate value because they depend on the magnet position, on the material on which it is applied (ferromagnetic or not) and because they are related to the magnet during the frontal approach.

DIMENSIONS (mm)

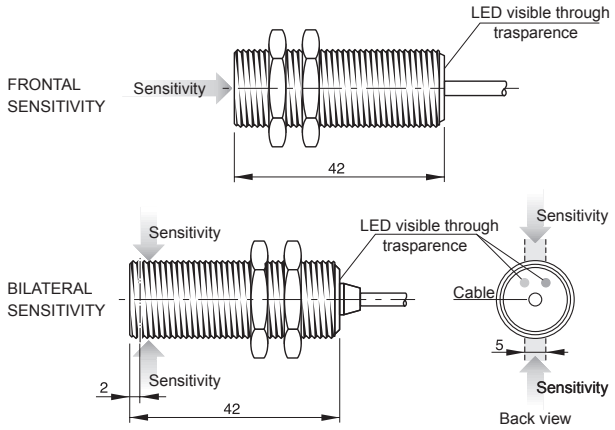

MAGNETS DIMENSIONS (MM)

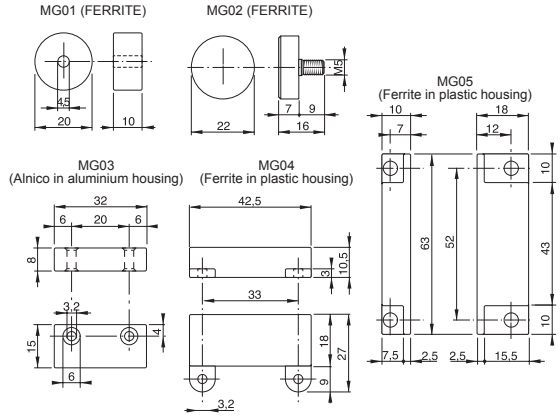

MODEL SELECTION AND ORDER INFORMATION

2MT CABLE

CODE	MODEL	HOUSING	METAL/PLASTIC	REED/HALL	WIRES	NPN/PNP	NO/NC
958951250	HS03B			HALL	3	PNP	NO
958951000	HS03F			HALL	3	PNP	NO
958951280	HS04B			HALL	3	PNP	NC
958951070	HS04F			HALL	3	PNP	NC
958951310	HS05B			HALL	3	PNP	NO
958951080	HS05F			HALL	3	PNP	NO
958951340	HS06B			HALL	3	PNP	NC
958951360	HS06F			HALL	3	PNP	NC

ACCESSORY SELECTION AND ORDER INFORMATION

CODE	MODEL	DESCRIPTION
95ACC3060	MG01	MG01 Ferrite magnet
95ACC3290	MG02	MG02 Ferrite magnet
95ACC3300	MG03	MG03 Alnico in aluminium housing magnet
95ACC3310	MG04	MG04 Ferrite in plastic housing magnet
95ACC3320	MG05	MG05 Ferrite in plastic housing magnet
95ACC3340	ST1218	ST1218 Brackets M12/M18 sensors

MODEL DESCRIPTION

SM 01 B

SERIES
SM = REED
HM = HALL EFFECT

DIAMETER AND CONNECTION
01 = NO
02 = NO+NC
03 = Ø 12 PNP NO
04 = Ø 12 PNP NC
05 = Ø 18 PNP NO
06 = Ø 18 PNP NC
07 = Ø 12 NO, LENGTH 40MM - METAL
08 = Ø 12 NO + NC, LENGTH 42MM - METAL
09 = Ø 12 POWER NO, LENGTH 30MM - METAL
13 = Ø 12 POWER NO, LENGTH 70MM - METAL
14 = Ø 12 POWER NO + NC, LENGTH 70MM - **METAL**
17 = Ø 18 POWER NO
18 = Ø 18 POWER NO + NC
19 = Ø 12 NO, LENGTH 100MM - PLASTIC
20 = Ø 12 POWER NO + NC, LENGTH 100MM - **PLASTIC**
21 = Ø 12 POWER NO, LENGTH 100MM - PLASTIC
22 = Ø 12 BISTABLE, LENGTH 100MM - PLASTIC
23 = Ø 12 NO + NC, LENGTH 100MM - PLASTIC

SENSITIVITY
B = BILATERAL SENSITIVITY
F = FRONTAL SENSITIVITY

Note: Not all code combinations are available. Please refer to alphabetical model index for the list of available models.

The company endeavours to continuously improve and renew its products; for this reason the technical data and contents of this catalogue may undergo variations without prior notice. For correct installation and use, the company can guarantee only the data indicated in the instruction manual supplied with the products.

REED CONTACT SERIES

Magnetic proximity sensors are ideally suited for harsh environments as they are insensitive to dust, heat and vibrations. They are typically used where other sensors have reached their technological limits.
The Datalogic Automation magnetic family provides the right solution to market requirements, offering a wide range of cylindrical sensors based on REED and HALL EFFECT, available also with two, three or four wires connection models, short and standard housing and cable or connector version. A complete range of Magnets complete the offer.

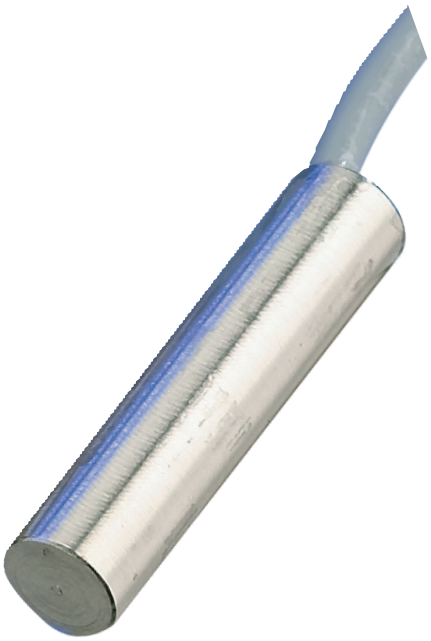

HIGHLIGHTS

- Wide range: suitable practically for all the industrial applications
- Plastic and metal housing : suitable for covering also applications in harsh enviroments
- REED and HALL EFFECT models
- 2, 3 or 4 wire connection: flexible connection system to meet customer applications

APPLICATIONS

Automatic warehouse

Automotive

Trasportation lines

Packaging lines

- Plastic housing
- 2 ms delay on activation
- 2 m integrated cable
- Choice of magnet targets

WIRING DIAGRAMS

NO CONTACT

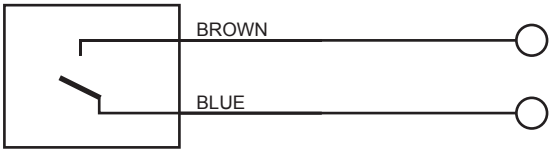

NO + NC CONTACT

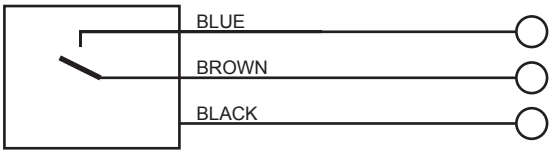

TECHNICAL DATA

MAX. VOLTAGE	250 Vpeak (I max = 0.04 A)
MAX. CURRENT	0.04 A
POWER	10 VA
SWITCHING FREQUENCY	200 Hz
DELAY ON ACTIVATION	2 ms
REPEATABILITY	± 0.3 mm
TEMPERATURE LIMITS	-20 ÷ +60°C
PROTECTION DEGREE	IP 67
CABLE LENGTH	2 m
CABLE SECTION	SM01=2x0.50mm²/SM02=3x0.35mm²
HOUSING MATERIAL	ABS
(1) Pw = 3VA : 100 Vpeak (I max = 0.03A) - 12V (I max = 0.25A)	

CE c UL US LISTED

HALL EFFECT SENSOR/MAGNET SWITCHING DISTANCE (MM)

DIAMETER 6

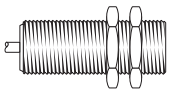

Distance	Hysteresis	
24	5	MG01
22	5	MG02
6	2,5	MG03
32	5	MG04
29	5	MG05

WARNING: The data specified in this table have an approximate value because they depend on the magnet position, on the material on which it is applied (ferromagnetic or not) and because they are related to the magnet during the frontal approach. Reed contact sensors can be also activated laterally considering that switching distances are always influenced by the magnet position and orientation besides the material on which it is applied (ferromagnetic or not).

DIMENSIONS (mm)

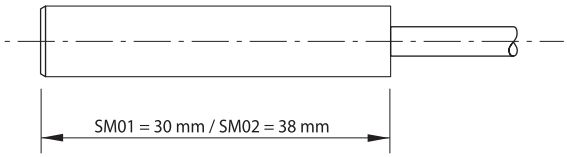

MAGNETS DIMENSIONS (MM)

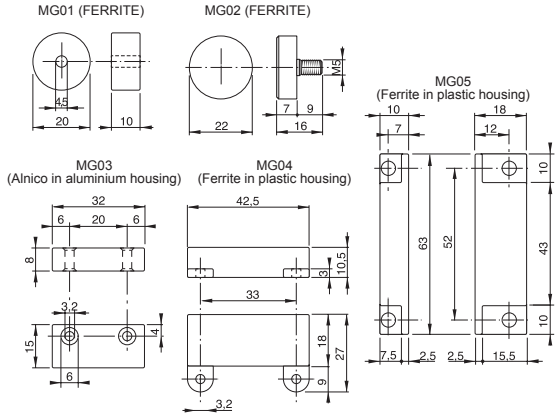

- Metal housing
- 2 ms delay on activation
- 2 m integrated cable
- Choice of magnet targets

WIRING DIAGRAMS

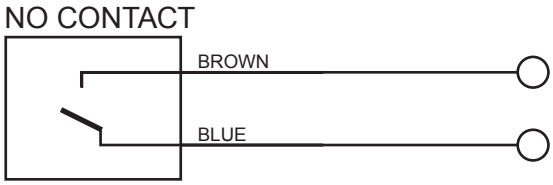

TECHNICAL DATA

MAX. VOLTAGE	250 Vpeak (I max = 0.05 A)
MAX. CURRENT	0.5 A (V max = 20V)
POWER	10 VA
SWITCHING FREQUENCY	200 Hz
DELAY ON ACTIVATION	2 ms
REPEATABILITY	± 0.3 mm
TEMPERATURE LIMITS	-20 ÷ +60°C
PROTECTION DEGREE	IP 67
CABLE LENGTH	2m
CABLE SECTION	3 x 0.50 mm²
HOUSING MATERIAL	Nickel-plated brass

c UL US LISTED

HALL EFFECT SENSOR/MAGNET SWITCHING DISTANCE (MM)

DIAMETER 8

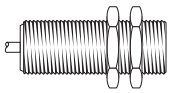

Distance	Hysteresis	
24	5	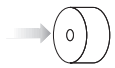 MG01
22	5	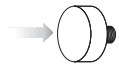 MG02
6	2,5	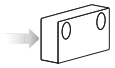 MG03
32	5	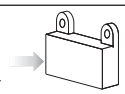 MG04
29	5	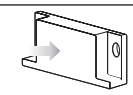 MG05

WARNING: The data specified in this table have an approximate value because they depend on the magnet position, on the material on which it is applied (ferromagnetic or not) and because they are related to the magnet during the frontal approach. Reed contact sensors can be also activated laterally considering that switching distances are always influenced by the magnet position and orientation besides the material on which it is applied (ferromagnetic or not).

DIMENSIONS (mm)

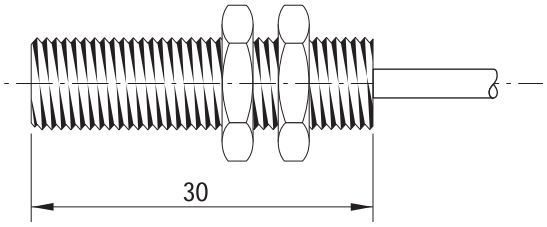

MAGNETS DIMENSIONS (MM)

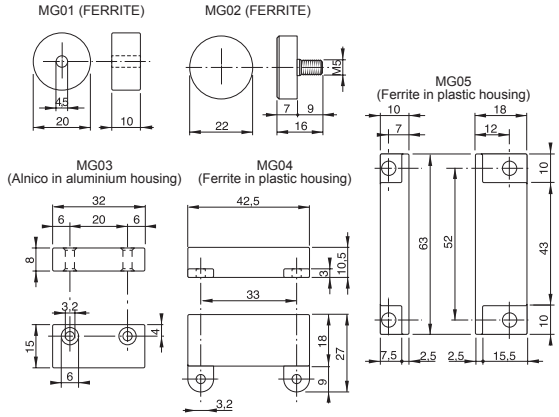

- Metal housing
- 2 ms delay on activation
- 2 m integrated cable
- Choice of magnet targets

WIRING DIAGRAMS

NO CONTACT

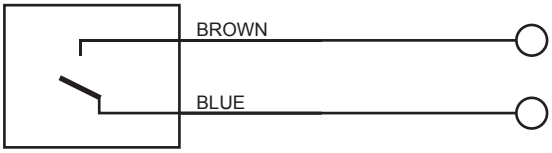

NO + NC CONTACT

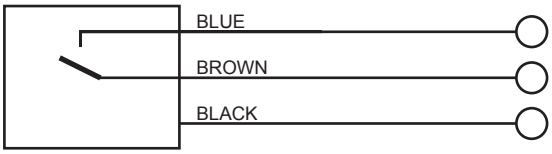

TECHNICAL DATA

MAX. VOLTAGE (SM 05)	250 Vpeak
MAX. CURRENT (SM 05)	0.04 A
POWER (SM 05)	10 VA
SWITCHING FREQUENCY	200 Hz
DELAY ON ACTIVATION	2 ms
REPEATABILITY	± 0.3 mm
TEMPERATURE LIMITS	-20 ÷ +60°C
PROTECTION DEGREE	IP 67
CABLE LENGTH	2m
CABLE SECTION	SM05 = 2x0.50 mm² / SM06 = 3x0.35 mm²
HOUSING MATERIAL	Nickel-plated brass
(1) Pw = 3VA : 100 Vpeak (I max = 0.03A) - 12V (I max = 0.25A)	

CE c UL us LISTED

HALL EFFECT SENSOR/MAGNET SWITCHING DISTANCE (MM)

DIAMETER 10

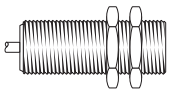

Distance	Hysteresis	
24	5	MG01 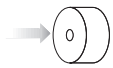
22	5	MG02 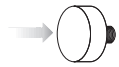
6	2,5	MG03 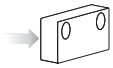
32	5	MG04 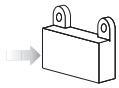
29	5	MG05 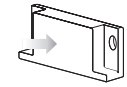

WARNING: The data specified in this table have an approximate value because they depend on the magnet position, on the material on which it is applied (ferromagnetic or not) and because they are related to the magnet during the frontal approach. Reed contact sensors can be also activated laterally considering that switching distances are always influenced by the magnet position and orientation besides the material on which it is applied (ferromagnetic or not).

DIMENSIONS (mm)

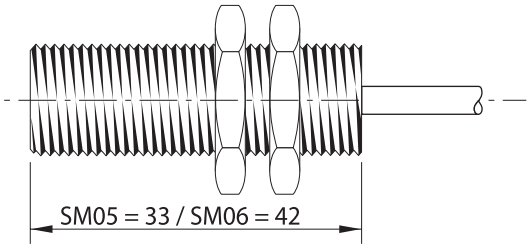

MAGNETS DIMENSIONS (MM)

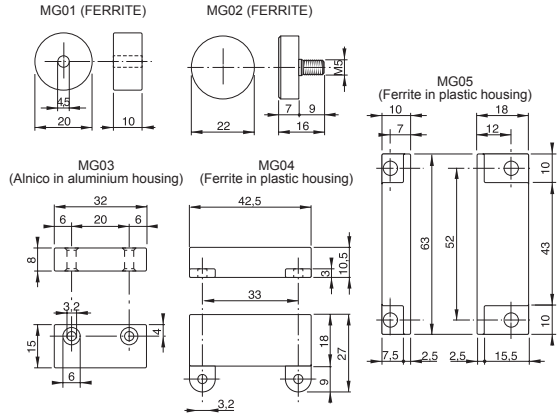

- Metal and plastic housing
- 2 ms delay on activation
- 2 m integrated cable
- Choice of magnet targets

WIRING DIAGRAMS

NO CONTACT

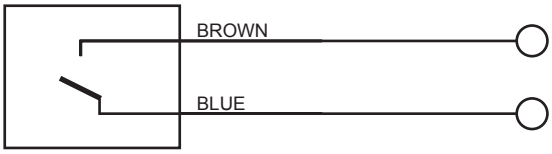

NO + NC CONTACT

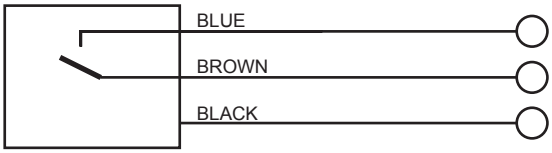

TECHNICAL DATA

MAX. VOLTAGE (SM 07)	230 Vpeak
MAX. CURRENT (SM 07)	0.04 A
POWER (SM 07)	10 VA
SWITCHING FREQUENCY	200 Hz
DELAY ON ACTIVATION	2 ms
REPEATABILITY	± 0.3 mm
TEMPERATURE LIMITS	-20 ÷ +60°C
PROTECTION DEGREE	IP 67
CABLE LENGTH	2m
CABLE SECTION	SM07/SM09/SM13=2x0.50mm^2 SM08/SM14=3x0.35mm^2 SM19/SM21/SM22=2x0.75mm^2
HOUSING MATERIAL	Nickel-plated brass

(1) Pw = 100W : I max = 3A (V = 33V) - Vpeak = 250V (I = 0.4A)
(2) Pw = 50W : I max = 1A (V = 50V) - Vpeak = 250V (I = 0.2A)
(3) Pw = 100W : I max = 3A (V = 33V) - Vpeak = 250V (I = 0.4A)
(4) Pw = 3W : I max = 0.25A (V = 12V) - Vpeak = 100V (I = 0.03A)
(5) Pw = 60W : I max = 3A (V = 20V) - Vpeak = 250V (I = 0.24A)
(6) Pw = 10W : I max = 0.5A (V = 20V) - Vpeak = 175V (I = 0.06A)

CE c UL US LISTED

HALL EFFECT SENSOR/MAGNET SWITCHING DISTANCE (MM)

DIAMETER 12

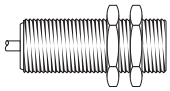

Distance	Hysteresis	
24 12 (Power)	5 7 (Power)	MG01 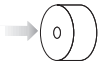
22 10 (Power)	5 6 (Power)	MG02 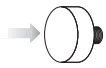
6 0 (Power)	2.5 0 (Power)	MG03 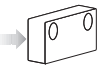
22 22 (Power)	9 9 (Power)	MG04 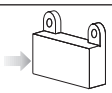
20 20 (Power)	9 9 (Power)	MG05 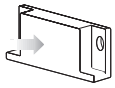

WARNING: The data specified in this table have an approximate value because they depend on the magnet position, on the material on which it is applied (ferromagnetic or not) and because they are related to the magnet during the frontal approach. Reed contact sensors can be also activated laterally considering that switching distances are always influenced by the magnet position and orientation besides the material on which it is applied (ferromagnetic or not).

PLASTIC HOUSING MODELS DIMENSIONS (MM)

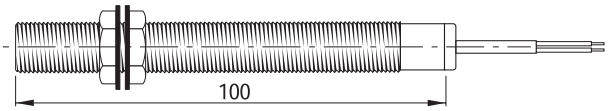

METAL HOUSING MODELS DIMENSIONS (M)

SHORT HOUSING

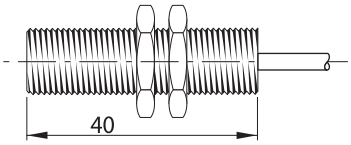

LONG HOUSING

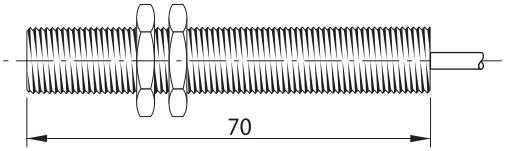

MAGNETS DIMENSIONS (MM)

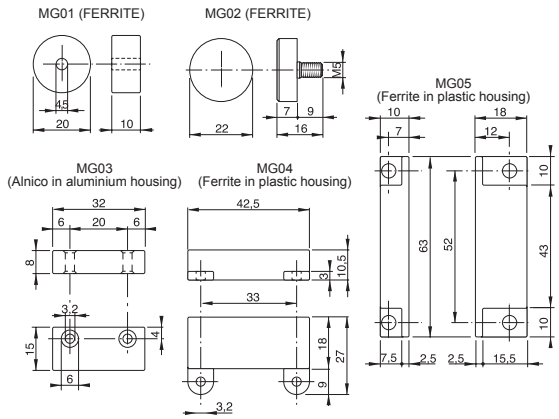

- Metal housing
- 2 ms delay on activation
- 2 m integrated cable
- Choice of magnet targets

WIRING DIAGRAMS

NO CONTACT

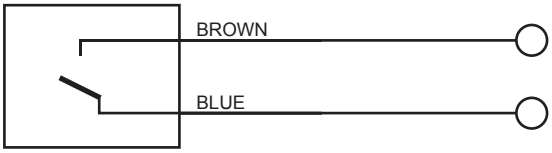

NO + NC CONTACT

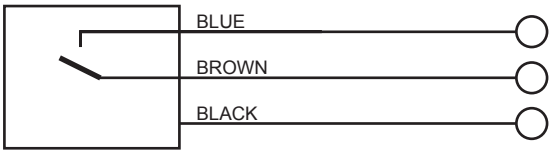

TECHNICAL DATA

MAX. VOLTAGE	SM17 : 250Vpeak (I=0.4A) SM18 : 250Vpeak (I=0.25A)
MAX. CURRENT	SM17 : 0.4 A (V=250V) SM18 : 3 A (V=20V)
POWER	SM17 = 100 VA - SM18 = 60 VA
SWITCHING FREQUENCY	200 Hz
DELAY ON ACTIVATION	2 ms
REPEATABILITY	± 0.3 mm
TEMPERATURE LIMITS	-20 ÷ +60°C
PROTECTION DEGREE	IP 67
CABLE LENGTH	2m
CABLE SECTION	SM17=2x0.5 mm² / SM18=3x0.5 mm²
HOUSING MATERIAL	Nickel-plated brass

HALL EFFECT SENSOR/MAGNET SWITCHING DISTANCE (MM)

DIAMETER 18

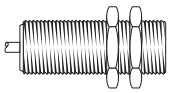

Distance	Hysteresis	
12	7	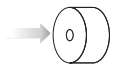 MG01
10	6	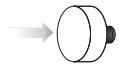 MG02
–	–	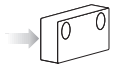 MG03
22	9	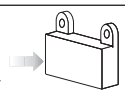 MG04
20	9	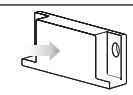 MG05

WARNING: The data specified in this table have an approximate value because they depend on the magnet position, on the material on which it is applied (ferromagnetic or not) and because they are related to the magnet during the frontal approach. Reed contact sensors can be also activated laterally considering that switching distances are always influenced by the magnet position and orientation besides the material on which it is applied (ferromagnetic or not).

DIMENSIONS (mm)

LONG HOUSING

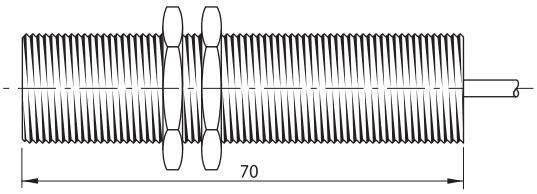

MAGNETS DIMENSIONS (MM)

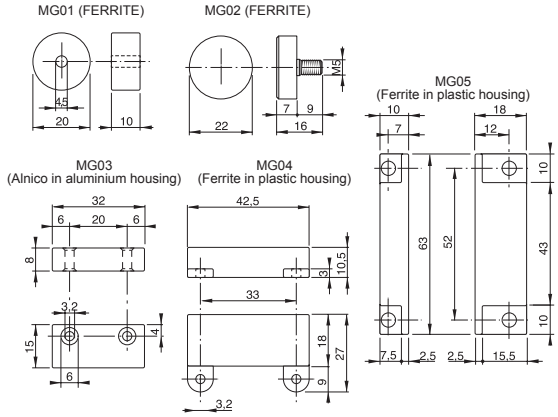

MODEL SELECTION AND ORDER INFORMATION

2MT CABLE

CODE	MODEL	HOUSING	METAL/PLASTIC	REED/HALL	WIRES	NPN/PNP	NO/NC
958951090	SM01			REED	2		NO
958951100	SM02			REED	3		NO + NC
958951010	SM03			REED	2		NO
958951110	SM05			REED	2		NO
958951020	SM06			REED	3		NO + NC
958951040	SM07	SHORT	METAL	REED	2		NO
958951470	SM08	SHORT	METAL	REED	3		NO + NC
958951500	SM09	SHORT	METAL	REED	2		NO
958951120	SM13	SHORT	METAL	REED	2		NO
958951130	SM14	SHORT	METAL	REED	3		NO + NC
958951050	SM19	LONG	PLASTIC	REED	2		NO
958951150	SM20	LONG	PLASTIC	REED	3		NO + NC
958951530	SM21	LONG	PLASTIC	REED	2		NO
958951060	SM22	LONG	PLASTIC	REED			
958951550	SM23	LONG	PLASTIC	REED	3		NO + NC
958951510	SM17			REED	2		NO
958951140	SM18			REED	3		NO + NC

ACCESSORY SELECTION AND ORDER INFORMATION

CODE	MODEL	DESCRIPTION
95ACC3060	MG01	MG01 Ferrite magnet
95ACC3290	MG02	MG02 Ferrite magnet
95ACC3300	MG03	MG03 Alnico in aluminium housing magnet
95ACC3310	MG04	MG04 Ferrite in plastic housing magnet
95ACC3320	MG05	MG05 Ferrite in plastic housing magnet
95ACC3340	ST1218	ST1218 Brackets M12/M18 sensors

MODEL DESCRIPTION

SM 01 B

SERIES
SM = REED
HM = HALL EFFECT

DIAMETER AND CONNECTION
01 = NO
02 = NO+NC
03 = Ø 12 PNP NO
04 = Ø 12 PNP NC
05 = Ø 18 PNP NO
06 = Ø 18 PNP NC
07 = Ø 12 NO, LENGTH 40MM - METAL
08 = Ø 12 NO + NC, LENGTH 42MM - METAL
09 = Ø 12 POWER NO, LENGTH 30MM - METAL
13 = Ø 12 POWER NO, LENGTH 70MM - METAL
14 = Ø 12 POWER NO + NC, LENGTH 70MM - **METAL**
17 = Ø 18 POWER NO
18 = Ø 18 POWER NO + NC
19 = Ø 12 NO, LENGTH 100MM - PLASTIC
20 = Ø 12 POWER NO + NC, LENGTH 100MM - **PLASTIC**
21 = Ø 12 POWER NO, LENGTH 100MM - PLASTIC
22 = Ø 12 BISTABLE, LENGTH 100MM - PLASTIC
23 = Ø 12 NO + NC, LENGTH 100MM - PLASTIC

SENSITIVITY
B = BILATERAL SENSITIVITY
F = FRONTAL SENSITIVITY

Note: Not all code combinations are available. Please refer to alphabetical model index for the list of available models.

The company endeavours to continuously improve and renew its products; for this reason the technical data and contents of this catalogue may undergo variations without prior notice. For correct installation and use, the company can guarantee only the data indicated in the instruction manual supplied with the products.

CS SERIES

The **CS** series offers high-quality connectors, developed to guarantee maximum reliability with particularly compact dimensions in the standard M8x1 and M12x1 formats, can be used to connect photoelectric sensors as well as inductive or capacitive proximity sensors.
The M8 and M12 connectors offer either an axial or radial shape; wired with a 4-pole normalised configuration, with 3, 5, 7 or 10 metre cable.
Moreover, the M12 connectors are available in other versions with a 3-pole normalised configuration for a normally open output, or with a yellow PNP output LED and a green power LED.
The connector body is in PUR plastic and the cable in PVC with CEI 20-22 flammability class.

HIGHLIGHTS

- M8 and M12, axial or radial connectors
- Pre-cabled with cable of various standard lengths
- Configuration normalised to 4-poles and NO 3-poles
- Versions with LED for power and output signalling

APPLICATIONS

Electronics

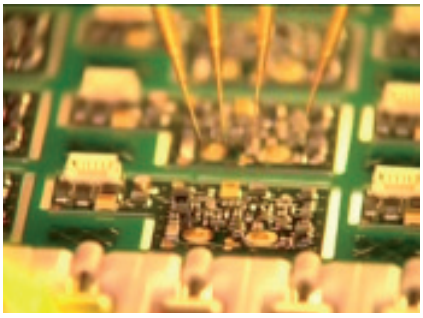

Automatic warehouse

Packaging lines

Beverage & Bottling

TECHNICAL DATA

Conductor diameter	42 x 0.10 mm - 0.35 mm≈ (M12 3-pole)
	32 x 0.10 mm - 0.25 mm≈ (M12 4-pole)
	32 x 0.10 mm - 0.25 mm≈ (M8 4-pole)
Conductor colour	refer to table 1 and 2
Cable diameter	5 mm
Cable length	3, 5, 7, 10 m
Cable colour	grey RAL 7035
Cable material	PVC
Conductor material	annealed non-tinned electrolytic copper, with high flexibility
Connector material	housing in PVC, insulation in Nylon 6 30% glass
Contact material	0.3 mm gold-nickel-plated brass
Connector configuration	refer to table 1 and 2
Mechanical protection	IP67, with locked ring
Flammability class	CEI 20-22, IEC 332/3
	flame-retardant and non-propagate
Rated voltage	300 Vdc / 250 Vac
	10-30 Vdc with LED
Maximum current	4 A
Test voltage	1 kV
Operating temperature	-25 ... +80°C
Reference standard	EN 50044, EN 60947-5-2
Certifications	**CE**

TABLES

TERMINAL	COLOUR	FUNCTION
1	brown	positive (+)
3	blue	negative (-)
4	black	NO output

Tabel 1: NO 3-POLE CONN. CONFIGURATION

TERMINAL	COLOUR	FUNCTION
1	brown	positive (+)
2	white	NC output
3	blue	negative (-)
4	black	NO output

Tabel 2: NO-NC 4-POLE CONN. CONFIGURATION

CONNECTIONS

M12 4-POLE CONNECTOR

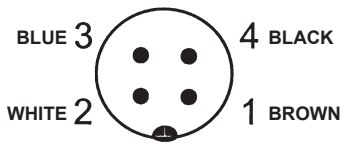

M12 3-POLE CONNECTOR

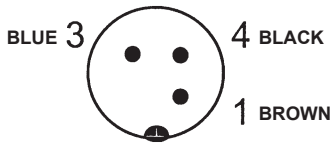

LED CONFIGURATION

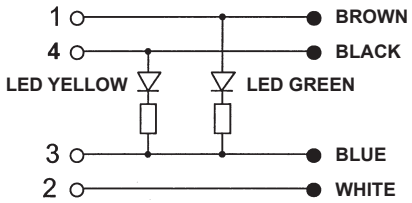

M8 4-POLE CONNECTOR

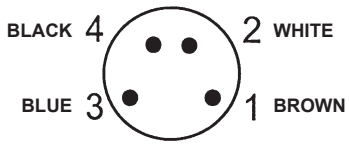

M12 8-POLE CONNECTOR

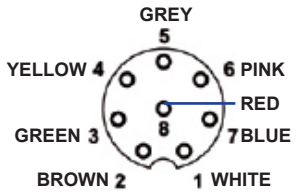

DIMENSIONS

RADIAL M12 CONNECTOR

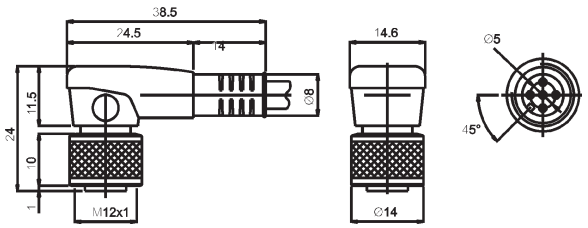

AXIAL M12 CONNECTOR

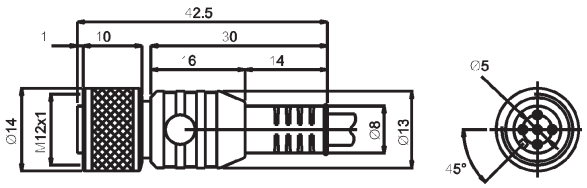

AXIAL M12 8-POLE FEMALE CONNECTOR

accepts conductors with
0.25 ... 0.75mm2 sections

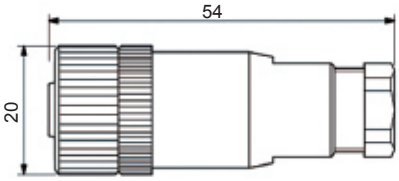

RADIAL M8 CONNECTOR

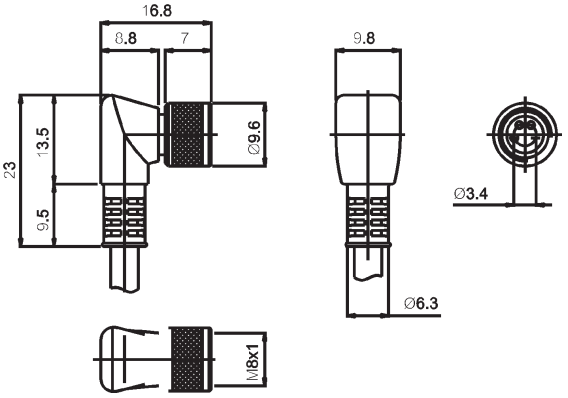

AXIAL M8 CONNECTOR

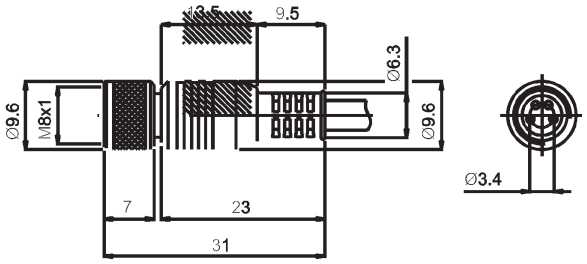

mm

MODEL SELECTION AND ORDER INFORMATION

MODEL	CONNECTOR	CONFIGURATION	CABLE LENGTH	CODE N°
CS-A1-01-G-03	axial M12	NO 3-poles	3 m	95A251290
CS-A1-01-G-05	axial M12	NO 3-poles	5 m	95A251300
CS-A1-01-G-07	axial M12	NO 3-poles	7 m	95A251320
CS-A1-01-G-10	axial M12	NO 3-poles	10 m	95A251340
CS-A1-02-G-03	axial M12	NO-NC 4-poles	3 m	95A251380
CS-A1-02-G-05	axial M12	NO-NC 4-poles	5 m	95A251270
CS-A1-02-G-07	axial M12	NO-NC 4-poles	7 m	95A251280
CS-A1-02-G-10	axial M12	NO-NC 4-poles	10 m	95A251390
CS-A1-02-U-03	axial M12	unsh. 4-pole	3 m	95ASE1120
CS-A1-02-U-05	axial M12	unsh. 4-pole	5 m	95ASE1130
CS-A1-02-U-10	axial M12	unsh. 4-pole	10 m	95ASE1140
CS-A1-02-U-15	axial M12	unsh. 4-pole	15 m	95ASE1150
CS-A1-02-U-25	axial M12	unsh. 4-pole	25 m	95ASE1160
CS-A1-03-G-03	axial M12	NO-NC 5-poles	3 m	95ACC2110
CS-A1-03-G-05	axial M12	NO-NC 5-poles	5 m	95ACC2120
CS-A1-03-G-10	axial M12	NO-NC 5-poles	10 m	95ACC2140
CS-A1-06-B-03	axial M12	8-poles	3 m	95ACC2230
CS-A1-06-B-05	axial M12	8-poles	5 m	95ACC2240
CS-A1-06-B-10	axial M12	8-poles	10 m	95ACC2250
CS-A1-06-B-NC	axial M12	8-poles	-	95ACC2550
CS-A2-01-G-03	radial M12	NO 3-poles	3 m	95A251200
CS-A2-01-G-05	radial M12	NO 3-poles	5 m	95A251210
CS-A2-01-G-07	radial M12	NO 3-poles	7 m	95A251220
CS-A2-01-G-10	radial M12	NO 3-poles	10 m	95A251230
CS-A2-02-G-03	radial M12	NO-NC 4-poles	3 m	95A251360
CS-A2-02-G-05	radial M12	NO-NC 4-poles	5 m	95A251240
CS-A2-02-G-07	radial M12	NO-NC 4-poles	7 m	95A251245
CS-A2-02-G-10	radial M12	NO-NC 4-poles	10 m	95A251260
CS-A2-11-G-05	radial M12*	NO 3-poles	5 m	95A251310
CS-A2-11-G-10	radial M12*	NO 3-poles	10 m	95A251330
CS-A2-12-G-03	radial M12*	NO-NC 4-poles	3 m	95A251400
CS-A2-12-G-05	radial M12*	NO-NC 4-poles	5 m	95A251350
CS-A2-12-G-10	radial M12*	NO-NC 4-poles	10 m	95A251370
CS-B1-01-G-03	axial M8	NA 3-poles	3 m	95A251490
CS-B1-01-G-05	axial M8	NA 3-poles	5 m	95A251510
CS-B2-01-G-03	radial M8	NA 3-poles	3 m	95A251500
CS-B2-01-G-05	radial M8	NA 3-poles	5 m	95A251520
CS-B1-02-G-03	axial M8	NO-NC 4-poles	3 m	95A251420
CS-B1-02-G-05	axial M8	NO-NC 4-poles	5 m	95A251430
CS-B1-02-G-07	axial M8	NO-NC 4-poles	7 m	95A251440
CS-B1-02-G-10	axial M8	NO-NC 4-poles	10 m	95A251480
CS-B2-02-G-03	radial M8	NO-NC 4-poles	3 m	95A251450
CS-B2-02-G-05	radial M8	NO-NC 4-poles	5 m	95A251460
CS-B2-02-G-07	radial M8	NO-NC 4-poles	7 m	95A251470
CS-B2-02-G-10	radial M8	NO-NC 4-poles	10 m	95A251530

Note: the connector has a yellow LED signal for the PNP and a green LED for power.

NON-CABLED CONNECTORS

MODELLO	DESCRIZIONE	N° ORDINE
CS-A1-02-B-NC	M12 4-pole axial female connector	G5085002
CS-A2-02-B-NC	M12 4-pole radial female connector	G5085003

The company endeavours to continuously improve and renew its products; for this reason the technical data and contents of this catalogue may undergo variations without prior notice. For correct installation and use, the company can guarantee only the data indicated in the instruction manual supplied with the products.

PROXIMITY INDUCTIVE CROSS-REFERENCE TABLE

INFRA		DLA OLD		DLA NEW	
CODE	MODEL	CODE	MODEL	CODE	MODEL
INDUCTIVE Ø 4mm					
2MT CABLE					
958301000	IS23	95B061000	IS-04-A3-03	95B061001	IS-04-A3-03
958301010	IS24	95B061010	IS-04-A1-03	95B061011	IS-04-A3-03
INDUCTIVE Ø 5mm					
2MT CABLE					
958351000	IS25	95B061020	IS-05-A3-03	95B061021	IS-05-A3-03
958351010	IS26	95B061040	IS-05-A1-03	95B061041	IS-05-A1-03
M8 CONNECTOR					
958351040	IS25K1	95B061030	IS-05-A3-S1	95B061031	IS-05-A3-S1
958351020	IS26K1	95B061050	IS-05-A1-S1	95B061051	IS-05-A1-S1
INDUCTIVE Ø 6,5mm					
2MT CABLE					
958401020	IS01			95B066290	IS-65-A20-03
958401040	IS06			95B066300	IS-65-C20-03
958401060	IS27			95B064650	IS-65-A3-03
958401070	IS27D			95B064660	IS-65-G3-03
958401110	IS27S			95B064670	IS-65-B3-03
958401120	IS28			95B064690	IS-65-A4-03
958401130	IS28D			95B064700	IS-65-G4-03
958401170	IS28S			95B064710	IS-65-B4-03
958401180	IS29			95B064730	IS-65-A1-03
958401190	IS29D			95B064740	IS-65-G1-03
958401210	IS29S			95B064750	IS-65-B1-03
958401220	IS30			95B064770	IS-65-A2-03
958401230	IS30D			95B064780	IS-65-G2-03
958401270	IS30S			95B064790	IS-65-B2-03
958401280	IS53			95B064810	IS-65-C3-03
958401290	IS53D			95B064820	IS-65-H3-03
958401330	IS53S			95B064830	IS-65-D3-03
958401340	IS54			95B064850	IS-65-C4-03
958401350	IS54D			95B064860	IS-65-H4-03
958401390	IS54S			95B064870	IS-65-D4-03
958401400	IS55			95B064890	IS-65-C1-03
958401410	IS55D			95B064900	IS-65-H1-03
958401450	IS55S			95B064910	IS-65-D1-03
958401460	IS56			95B064930	IS-65-C2-03
958401470	IS56D			95B064940	IS-65-H2-03
958401510	IS56S			95B064950	IS-65-D2-03
958401540	ISI27S			95B064680	IS-65-M3-03
958401580	ISI28S			95B064720	IS-65-M4-03
958401620	ISI29S			95B064760	IS-65-M1-03
958401660	ISI30S			95B064800	IS-65-M2-03
958401700	ISI53S			95B064840	IS-65-N3-03
958401740	ISI54S			95B064880	IS-65-N4-03
958401780	ISI55S			95B064920	IS-65-N1-03
958401820	ISI56S			95B064960	IS-65-N2-03
M8 CONNECTOR					
958401030	IS01K1			95B066310	IS-65-A20-S1
958401050	IS06K1			95B066320	IS-65-C20-S1
958401080	IS27DK1			95B064980	IS-65-G3-S1
958401090	IS27K1			95B064970	IS-65-A3-S1
958401100	IS27SK1			95B064990	IS-65-B3-S1
958401140	IS28DK1			95B066020	IS-65-G4-S1
958401150	IS28K1			95B066010	IS-65-A4-S1
958401160	IS28SK1			95B066030	IS-65-B4-S1

PROXIMITY INDUCTIVE CROSS-REFERENCE TABLE

INFRA		DLA OLD		DLA NEW	
CODE	MODEL	CODE	MODEL	CODE	MODEL
M8 CONNECTOR					
958401000	IS29DK1			95B066060	IS-65-G1-S1
958401200	IS29K1			95B066050	IS-65-A1-S1
958401010	IS29SK1			95B066070	IS-65-B1-S1
958401240	IS30DK1			95B066100	IS-65-G2-S1
958401250	IS30K1			95B066090	IS-65-A2-S1
958401260	IS30SK1			95B066110	IS-65-B2-S1
958401300	IS53DK1			95B066140	IS-65-H3-S1
958401310	IS53K1			95B066130	IS-65-C3-S1
958401320	IS53SK1			95B066150	IS-65-D3-S1
958401360	IS54DK1			95B066180	IS-65-H4-S1
958401370	IS54K1			95B066170	IS-65-C4-S1
958401380	IS54SK1			95B066190	IS-65-D4-S1
958401420	IS55DK1			95B066220	IS-65-H1-S1
958401430	IS55K1			95B066210	IS-65-C1-S1
958401440	IS55SK1			95B066230	IS-65-D1-S1
958401480	IS56DK1			95B066260	IS-65-H2-S1
958401490	IS56K1			95B066250	IS-65-C2-S1
958401500	IS56SK1			95B066270	IS-65-D2-S1
958401520	ISI27SK1			95B066000	IS-65-M3-S1
958401560	ISI28SK1			95B066040	IS-65-M4-S1
958401600	ISI29SK1			95B066080	IS-65-M1-S1
958401640	ISI30SK1			95B066120	IS-65-M2-S1
958401680	ISI53SK1			95B066160	IS-65-N3-S1
958401720	ISI54SK1			95B066200	IS-65-N4-S1
958401760	ISI55SK1			95B066240	IS-65-N1-S1
958401800	ISI56SK1			95B066280	IS-65-N2-S1
INDUCTIVE Ø 8mm					
2MT CABLE					
958451170	IS02			95B066740	IS-08-A20-03
958451180	IS07			95B066750	IS-08-C20-03
958451010	IS31	95B061060	IS-08-A3-03	95B061061	IS-08-A3-03
958451020	IS31D	95B063080	IS-08-G3-03	95B066330	IS-08-G3-03
958451490	IS31S	95B061860	IS-08-B3-03	95B061861	IS-08-B3-03
958451510	IS32	95B061090	IS-08-A4-03	95B061091	IS-08-A4-03
958451520	IS32D	95B063110	IS-08-G4-03	95B066350	IS-08-G4-03
958451590	IS32S	95B061890	IS-08-B4-03	95B061891	IS-08-B4-03
958451030	IS33	95B061120	IS-08-A1-03	95B061121	IS-08-A1-03
958451040	IS33D	95B063140	IS-08-G1-03	95B066370	IS-08-G1-03
958451100	IS33S	95B061920	IS-08-B1-03	95B061921	IS-08-B1-03
958451600	IS34	95B061150	IS-08-A2-03	95B061151	IS-08-A2-03
958451200	IS34D	95B063170	IS-08-G2-03	95B066390	IS-08-G2-03
958451230	IS34S	95B061950	IS-08-B2-03	95B061951	IS-08-B2-03
958451240	IS57	95B061460	IS-08-C3-03	95B066410	IS-08-C3-03
958451250	IS57D	95B063200	IS-08-H3-03	95B066420	IS-08-H3-03
958451700	IS57S	95B062260	IS-08-D3-03	95B066430	IS-08-D3-03
958451710	IS58	95B061490	IS-08-C4-03	95B066450	IS-08-C4-03
958451720	IS58D	95B063230	IS-08-H4-03	95B066460	IS-08-H4-03
958451790	IS58S	95B062290	IS-08-D4-03	95B062291	IS-08-D4-03
958451120	IS59	95B061520	IS-08-C1-03	95B061521	IS-08-C1-03
958451260	IS59D	95B063260	IS-08-H1-03	95B066480	IS-08-H1-03
958451130	IS59S	95B062320	IS-08-D1-03	95B062321	IS-08-D1-03
958451320	IS60	95B061550	IS-08-C2-03	95B061551	IS-08-C2-03
958451810	IS60D	95B063290	IS-08-H2-03	95B066500	IS-08-H2-03
958451880	IS60S	95B062350	IS-08-D2-03	95B062351	IS-08-D2-03
958451930	ISI31S			95B066340	IS-08-M3-03

PROXIMITY INDUCTIVE CROSS-REFERENCE TABLE

INFRA		DLA OLD		DLA NEW	
CODE	MODEL	CODE	MODEL	CODE	MODEL
958451990	ISI32S			95B066360	IS-08-M4-03
958451140	ISI33S			95B066380	IS-08-M1-03
958452090	ISI34S			95B066400	IS-08-M2-03
958452150	ISI57S			95B066440	IS-08-N3-03
958452210	ISI58S			95B066470	IS-08-N4-03
958452270	ISI59S			95B066490	IS-08-N1-03
958452330	ISI60S			95B066510	IS-08-N2-03
M8 CONNECTOR					
958451400	IS02K1			95B066780	IS-08-A20-S1
958451420	IS07K1			95B066790	IS-08-C20-S1
958451440	IS31DK1	95B063100	IS-08-G3-S1	95B066800	IS-08-G3-S1
958451460	IS31K1	95B061080	IS-08-A3-S1	95B061081	IS-08-A3-S1
958451470	IS31SK1	95B066810	IS-08-B3-S1	95B066810	IS-08-B3-S1
958451540	IS32DK1	95B063130	IS-08-G4-S1	95B063131	IS-08-G4-S1
958451560	IS32K1	95B061110	IS-08-A4-S1	95B061111	IS-08-A4-S1
958451570	IS32SK1	95B061910	IS-08-B4-S1	95B066830	IS-08-B4-S1
958451060	IS33DK1	95B063160	IS-08-G1-S1	95B066850	IS-08-G1-S1
958451080	IS33K1	95B061140	IS-08-A1-S1	95B061141	IS-08-A1-S1
958451090	IS33SK1	95B061940	IS-08-B1-S1	95B066860	IS-08-B1-S1
958451620	IS34DK1	95B063190	IS-08-G2-S1	95B066880	IS-08-G2-S1
958451210	IS34K1	95B061170	IS-08-A2-S1	95B061171	IS-08-A2-S1
958451220	IS34SK1	95B061970	IS-08-B2-S1	95B066890	IS-08-B2-S1
958451110	IS57DK1	95B063220	IS-08-H3-S1	95B066910	IS-08-H3-S1
958451670	IS57K1	95B061480	IS-08-C3-S1	95B061481	IS-08-C3-S1
958451680	IS57SK1	95B062280	IS-08-D3-S1	95B066920	IS-08-D3-S1
958451740	IS58DK1	95B063250	IS-08-H4-S1	95B063251	IS-08-H4-S1
958451760	IS58K1	95B061510	IS-08-C4-S1	95B061511	IS-08-C4-S1
958451770	IS58SK1	95B062310	IS-08-D4-S1	95B066940	IS-08-D4-S1
958451280	IS59DK1	95B063280	IS-08-H1-S1	95B066960	IS-08-H1-S1
958451300	IS59K1	95B061540	IS-08-C1-S1	95B061541	IS-08-C1-S1
958451800	IS59SK1	95B062340	IS-08-D1-S1	95B066970	IS-08-D1-S1
958451830	IS60DK1	95B063310	IS-08-H2-S1	95B066990	IS-08-H2-S1
958451850	IS60K1	95B061570	IS-08-C2-S1	95B061571	IS-08-C2-S1
958451860	IS60SK1	95B062370	IS-08-D2-S1	95B067000	IS-08-D2-S1
958451890	ISI31SK1			95B066820	IS-08-M3-S1
958451950	ISI32SK1			95B066840	IS-08-M4-S1
958451330	ISI33SK1			95B066870	IS-08-M1-S1
958452050	ISI34SK1			95B066900	IS-08-M2-S1
958452110	ISI57SK1			95B066930	IS-08-N3-S1
958452170	ISI58SK1			95B066950	IS-08-N4-S1
958452230	ISI59SK1			95B066980	IS-08-N1-S1
958452290	ISI60SK1			95B067010	IS-08-N2-S1
M12 CONNECTOR					
958451390	IS02K			95B066760	IS-08-A20-S2
958451410	IS07K			95B066770	IS-08-C20-S2
958451430	IS31DK	95B063090	IS-08-G3-S2	95B066520	IS-08-G3-S2
958451450	IS31K	95B061070	IS-08-A3-S2	95B061071	IS-08-A3-S2
958451480	IS31SK	95B061870	IS-08-B3-S2	95B066530	IS-08-B3-S2
958451530	IS32DK	95B063120	IS-08-G4-S2	95B066550	IS-08-G4-S2
958451550	IS32K	95B061100	IS-08-A4-S2	95B061101	IS-08-A4-S2
958451580	IS32SK	95B061900	IS-08-B4-S2	95B066560	IS-08-B4-S2
958451050	IS33DK	95B063150	IS-08-G1-S2	95B066580	IS-08-G1-S2
958451070	IS33K	95B061130	IS-08-A1-S2	95B061131	IS-08-A1-S2
958451190	IS33SK	95B061930	IS-08-B1-S2	95B066590	IS-08-B1-S2
958451610	IS34DK	95B063180	IS-08-G2-S2	95B066610	IS-08-G2-S2
958451630	IS34K	95B061160	IS-08-A2-S2	95B061161	IS-08-A2-S2

PROXIMITY INDUCTIVE CROSS-REFERENCE TABLE

INFRA		DLA OLD		DLA NEW	
CODE	MODEL	CODE	MODEL	CODE	MODEL
958451640	IS34SK	95B061960	IS-08-B2-S2	95B066620	IS-08-B2-S2
958451650	IS57DK	95B063210	IS-08-H3-S2	95B066640	IS-08-H3-S2
958451660	IS57K	95B061470	IS-08-C3-S2	95B061471	IS-08-C3-S2
958451690	IS57SK	95B062270	IS-08-D3-S2	95B066650	IS-08-D3-S2
958451730	IS58DK	95B063240	IS-08-H4-S2	95B063241	IS-08-H4-S2
958451750	IS58K	95B061500	IS-08-C4-S2	95B061501	IS-08-C4-S2
958451780	IS58SK	95B062300	IS-08-D4-S2	95B066670	IS-08-D4-S2
958451270	IS59DK	95B063270	IS-08-H1-S2	95B066690	IS-08-H1-S2
958451290	IS59K	95B061530	IS-08-C1-S2	95B061531	IS-08-C1-S2
958451310	IS59SK	95B062330	IS-08-D1-S2	95B066700	IS-08-D1-S2
958451820	IS60DK	95B063300	IS-08-H2-S2	95B063301	IS-08-H2-S2
958451840	IS60K	95B061560	IS-08-C2-S2	95B061561	IS-08-C2-S2
958451870	IS60SK	95B062360	IS-08-D2-S2	95B066720	IS-08-D2-S2
958451910	ISI31SK			95B066540	IS-08-M3-S2
958451970	ISI32SK			95B066570	IS-08-M4-S2
958452020	ISI33SK			95B066600	IS-08-M1-S2
958452070	ISI34SK			95B066630	IS-08-M2-S2
958452130	ISI57SK			95B066660	IS-08-N3-S2
958452190	ISI58SK			95B066680	IS-08-N4-S2
958452250	ISI59SK			95B066710	IS-08-N1-S2
958452310	ISI60SK			95B066730	IS-08-N2-S2
INDUCTIVE Ø 12mm					
2MT CABLE					
958501360	IS03			95B064160	IS-12-A20-03
958501030	IS08			95B064170	IS-12-C20-03
958501680	IS100				
958501690	IS100D	95B063890	IS-12-E7-03		
958501720	IS101				
958501730	IS101D				
958501760	IS106				
958501770	IS106D				
958501800	IS107				
958501810	IS107D				
958501370	IS11			95B064100	IS-12-A9-03
958501380	IS11D	95B063800	IS-12-E9-03	95B063801	IS-12-G9-03
958501390	IS17			95B064110	IS-12-B9-03
958501860	IS17D			95B064120	IS-12-H9-03
958501040	IS35	95B061180	IS-12-A3-03	95B061181	IS-12-A3-03
958501400	IS35D	95B063320	IS-12-G3-03	95B063321	IS-12-G3-03
958501940	IS35S	95B061980	IS-12-B3-03	95B061981	IS-12-B3-03
958501950	IS36	95B061210	IS-12-A4-03	95B061211	IS-12-A4-03
958501960	IS36D	95B063340	IS-12-G4-03	95B063341	IS-12-G4-03
958502030	IS36S	95B062010	IS-12-B4-03	95B062011	IS-12-B4-03
958501050	IS37D	95B062660	IS-12-G6-03	95B062661	IS-12-G6-03
958501070	IS38	95B061240	IS-12-A1-03	95B061241	IS-12-A1-03
958501420	IS38D	95B063360	IS-12-G1-03	95B063361	IS-12-G1-03
958501100	IS38S	95B062040	IS-12-B1-03	95B062041	IS-12-B1-03
958501450	IS39	95B061270	IS-12-A2-03	95B061271	IS-12-A2-03
958502070	IS39D	95B063380	IS-12-G2-03	95B063381	IS-12-G2-03
958502130	IS39S	95B062070	IS-12-B2-03	95B062071	IS-12-B2-03
958501130	IS40D	95B062680	IS-12-G5-03	95B062681	IS-12-G5-03
958501150	IS61	95B061580	IS-12-C3-03	95B061581	IS-12-C3-03
958502140	IS61D	95B063400	IS-12-H3-03	95B063401	IS-12-H3-03
958501170	IS61S	95B062380	IS-12-D3-03	95B062381	IS-12-D3-03
958501480	IS62	95B061610	IS-12-C4-03	95B061611	IS-12-C4-03
958502190	IS62D	95B063420	IS-12-H4-03	95B063421	IS-12-H4-03

PROXIMITY INDUCTIVE CROSS-REFERENCE TABLE

INFRA		DLA OLD		DLA NEW	
CODE	MODEL	CODE	MODEL	CODE	MODEL
958502250	IS62S	95B062410	IS-12-D4-03	95B062411	IS-12-D4-03
958501490	IS63D	95B062740	IS-12-H6-03	95B062741	IS-12-H6-03
958501180	IS64	95B061640	IS-12-C1-03	95B061641	IS-12-C1-03
958502260	IS64D	95B063440	IS-12-H1-03	95B063441	IS-12-H1-03
958501210	IS64S	95B062440	IS-12-D1-03	95B062441	IS-12-D1-03
958501220	IS65	95B061670	IS-12-C2-03	95B061671	IS-12-C2-03
958502320	IS65D	95B063460	IS-12-H2-03	95B063461	IS-12-H2-03
958502370	IS65S	95B062470	IS-12-D2-03	95B062471	IS-12-D2-03
958501510	IS66D	95B062760	IS-12-H5-03	95B062761	IS-12-H5-03
958501250	IS79	95B062820	IS-12-A7-03	95B060680	IS-12-A15-03
958501520	IS79D				
958501530	IS80	95B062840	IS-12-A8-03		
958502400	IS80D				
958501260	IS85	95B062940	IS-12-C7-03	95B060680	IS-12-A15-03
958501540	IS85D				
958501550	IS86	95B062960	IS-12-C8-03		
958502450	IS86D				
958502480	ISHT35				
958502490	ISHT38				
958502520	ISI35S				
958502560	ISI36S				
958502590	ISI38S				
958502630	ISI39S				
958501570	ISI61S				
958502710	ISI62S				
958501270	ISI64S				
958502770	ISI65S				
958501280	ISM01			95B064030	IS-12-A0-03
958501290	ISM01D	95B063840	IS-12-E0-03	95B063841	IS-12-G0-03
958501310	ISM02			95B064040	IS-12-B0-03
958501320	ISM02D			95B064050	IS-12-H0-03
M8 CONNECTOR					
958501650	IS03K1				
958501670	IS08K1				
958501900	IS35DK1				
958501910	IS35K1	95B061200	IS-12-A3-S1		
958501920	IS35SK1				
958501980	IS36DK1				
958502000	IS36K1	95B061230	IS-12-A4-S1		
958502010	IS36SK1				
958501440	IS38DK1				
958502040	IS38K1	95B061260	IS-12-A1-S1		
958502050	IS38SK1				
958502090	IS39DK1				
958502100	IS39K1	95B061290	IS-12-A2-S1		
958502110	IS39SK1				
958502160	IS61K1	95B061600	IS-12-C3-S1		
958502170	IS61SK1				
958502220	IS62K1	95B061630	IS-12-C4-S1		
958502230	IS62SK1				
958502280	IS64DK1				
958502290	IS64K1	95B061660	IS-12-C1-S1		
958502300	IS64SK1				
958502340	IS65K1	95B061690	IS-12-C2-S1		
958502350	IS65SK1				
958502830	ISM01K			95B064060	IS-12-A0-S2

PROXIMITY INDUCTIVE CROSS-REFERENCE TABLE

INFRA		DLA OLD		DLA NEW	
CODE	MODEL	CODE	MODEL	CODE	MODEL
M12 CONNECTOR					
958501640	IS03K			95B064180	IS-12-A20-S2
958501660	IS08K			95B064190	IS-12-C20-S2
958501700	IS100DK				
958501710	IS100K				
958501740	IS101DK				
958501750	IS101K				
958501780	IS106DK				
958501790	IS106K				
958501820	IS107DK				
958501830	IS107K				
958501840	IS11DK			95B064130	IS-12-G9-S2
958501850	IS11K	95B063930	IS-12-A9-S2	95B063931	IS-12-A9-S2
958501870	IS17DK			95B064150	IS-12-H9-S2
958501880	IS17K			95B064140	IS-12-B9-S2
958501890	IS35DK	95B063330	IS-12-G3-S2	95B063331	IS-12-G3-S2
958501410	IS35K	95B061190	IS-12-A3-S2	95B061191	IS-12-A3-S2
958501930	IS35SK	95B061990	IS-12-B3-S2	95B061991	IS-12-B3-S2
958501970	IS36DK	95B063350	IS-12-G4-S2	95B063351	IS-12-G4-S2
958501990	IS36K	95B061220	IS-12-A4-S2	95B061221	IS-12-A4-S2
958502020	IS36SK	95B062020	IS-12-B4-S2	95B062021	IS-12-B4-S2
958501060	IS37DK	95B062670	IS-12-G6-S2	95B062671	IS-12-G6-S2
958501430	IS38DK	95B063370	IS-12-G1-S2	95B063371	IS-12-G1-S2
958501080	IS38K	95B061250	IS-12-A1-S2	95B061251	IS-12-A1-S2
958501090	IS38SK	95B062050	IS-12-B1-S2	95B062051	IS-12-B1-S2
958502080	IS39DK	95B063390	IS-12-G2-S2	95B063391	IS-12-G2-S2
958501460	IS39K	95B061280	IS-12-A2-S2	95B061281	IS-12-A2-S2
958502120	IS39SK	95B062080	IS-12-B2-S2	95B062081	IS-12-B2-S2
958501140	IS40DK	95B062690	IS-12-G5-S2	95B062691	IS-12-G5-S2
958502150	IS61DK	95B063410	IS-12-H3-S2	95B063411	IS-12-H3-S2
958501160	IS61K	95B061590	IS-12-C3-S2	95B061591	IS-12-C3-S2
958501470	IS61SK	95B062390	IS-12-D3-S2	95B062391	IS-12-D3-S2
958502200	IS62DK	95B063430	IS-12-H4-S2	95B063431	IS-12-H4-S2
958502210	IS62K	95B061620	IS-12-C4-S2	95B061621	IS-12-C4-S2
958502240	IS62SK	95B062420	IS-12-D4-S2	95B062421	IS-12-D4-S2
958501500	IS63DK	95B062750	IS-12-H6-S2	95B062751	IS-12-H6-S2
958502270	IS64DK	95B063450	IS-12-H1-S2	95B063451	IS-12-H1-S2
958501190	IS64K	95B061650	IS-12-C1-S2	95B061651	IS-12-C1-S2
958501200	IS64SK	95B062450	IS-12-D1-S2	95B062451	IS-12-D1-S2
958502330	IS65DK	95B063470	IS-12-H2-S2	95B063471	IS-12-H2-S2
958501230	IS65K	95B061680	IS-12-C2-S2	95B061681	IS-12-C2-S2
958502360	IS65SK	95B062480	IS-12-D2-S2	95B062481	IS-12-D2-S2
958501240	IS66DK	95B062770	IS-12-H5-S2	95B062771	IS-12-H5-S2
958502380	IS79DK				
958502390	IS79K	95B062830	IS-12-A7-S2	95B065370	IS-F12-T1-S2
958502410	IS80DK				
958502420	IS80K	95B062850	IS-12-A8-S2		
958502430	IS85DK				
958502440	IS85K	95B062950	IS-12-C7-S2	95B065370	IS-F12-T1-S2
958502460	IS86DK				
958502470	IS86K	95B062970	IS-12-C8-S2		
958502500	ISI35SK			95B060260	IS-12-M3-S2
958502540	ISI36SK			95B060270	IS-12-M4-S2
958501560	ISI38SK			95B060240	IS-12-M1-S2
958502610	ISI39SK			95B060250	IS-12-M2-S2
958502660	ISI61SK			95B060300	IS-12-N3-S2

PROXIMITY INDUCTIVE CROSS-REFERENCE TABLE

INFRA		DLA OLD		DLA NEW	
CODE	MODEL	CODE	MODEL	CODE	MODEL
958502690	ISI62SK			95B060310	IS-12-N4-S2
958501580	ISI64SK			95B060280	IS-12-N1-S2
958502750	ISI65SK			95B060290	IS-12-N2-S2
958501300	ISM01DK			95B064070	IS-12-G0-S2
958502860	ISM02DK			95B064090	IS-12-H0-S2
958501330	ISM02K			95B064080	IS-12-B0-S2
958502910	ISMF38K			95B065340	IS-12-I1-S2
958502920	ISMF64K	95B063870	IS-12-L1-S2	95B063871	IS-12-L1-S2
958502930	ISWI38K			95B065360	IS-F12-S1-S2
958502940	ISWI64K			95B065370	IS-F12-T1-S2
INDUCTIVE Ø 18mm					
2MT CABLE					
958601250	IS04			95B064360	IS-18-A20-03
958601270	IS09			95B064370	IS-18-C20-03
958601600	IS102				
958601610	IS102D	95B063900	IS-18-E7-03		
958601640	IS103				
958601650	IS103D				
958601680	IS108				
958601690	IS108D				
958601720	IS109				
958601730	IS109D				
958601280	IS13			95B064300	IS-18-A9-03
958601290	IS13D	95B063810	IS-18-E9-03	95B063811	IS-18-G9-03
958601300	IS19			95B064310	IS-18-B9-03
958601310	IS19D			95B064320	IS-18-H9-03
958601020	IS41	95B061300	IS-18-A3-03	95B061301	IS-18-A3-03
958601030	IS41D	95B063060	IS-18-G3-03	95B063061	IS-18-G3-03
958601320	IS41S	95B062100	IS-18-B3-03	95B062101	IS-18-B3-03
958601840	IS42	95B061320	IS-18-A4-03	95B061321	IS-18-A4-03
958601850	IS42D	95B063500	IS-18-G4-03	95B063501	IS-18-G4-03
958601890	IS42S	95B062120	IS-18-B4-03	95B062121	IS-18-B4-03
958601330	IS43D	95B062700	IS-18-G6-03	95B064200	IS-18-G6-03
958601040	IS44	95B061340	IS-18-A1-03	95B061341	IS-18-A1-03
958601900	IS44D	95B063520	IS-18-G1-03	95B063521	IS-18-G1-03
958601350	IS44S	95B062140	IS-18-B1-03	95B062141	IS-18-B1-03
958601360	IS45	95B061360	IS-18-A2-03	95B061361	IS-18-A2-03
958601920	IS45D	95B063540	IS-18-G2-03	95B063541	IS-18-G2-03
958601950	IS45S	95B062160	IS-18-B2-03	95B062161	IS-18-B2-03
958601080	IS46D	95B062720	IS-18-G5-03	95B062721	IS-18-G5-03
958601100	IS67	95B061700	IS-18-C3-03	95B061701	IS-18-C3-03
958601110	IS67D	95B063560	IS-18-H3-03	95B063561	IS-18-H3-03
958601390	IS67S	95B062500	IS-18-D3-03	95B062501	IS-18-D3-03
958602010	IS68	95B061720	IS-18-C4-03	95B061721	IS-18-C4-03
958602020	IS68D	95B063580	IS-18-H4-03	95B063581	IS-18-H4-03
958602060	IS68S	95B062520	IS-18-D4-03	95B062521	IS-18-D4-03
958601120	IS69D	95B062780	IS-18-H6-03	95B064210	IS-18-H6-03
958601130	IS70	95B061740	IS-18-C1-03	95B061741	IS-18-C1-03
958602080	IS70D	95B063600	IS-18-H1-03	95B063601	IS-18-H1-03
958601400	IS70S	95B062540	IS-18-D1-03	95B062541	IS-18-D1-03
958601410	IS71	95B061760	IS-18-C2-03	95B061761	IS-18-C2-03
958602100	IS71D	95B063620	IS-18-H2-03	95B063621	IS-18-H2-03
958602130	IS71S	95B062560	IS-18-D2-03	95B062561	IS-18-D2-03
958601430	IS72D	95B062800	IS-18-H5-03	95B064220	IS-18-H5-03
958601180	IS81	95B062860	IS-18-A7-03	95B060770	IS-18-A15-03
958601440	IS81D				

PROXIMITY INDUCTIVE CROSS-REFERENCE TABLE

INFRA		DLA OLD		DLA NEW	
CODE	MODEL	CODE	MODEL	CODE	MODEL
958601190	IS82	95B062880	IS-18-A8-03		
958602170	IS82D				
958601200	IS87	95B062980	IS-18-C7-03	95B060770	IS-18-A15-03
958601450	IS87D				
958601470	IS88	95B063000	IS-18-C8-03		
958602220	IS88D				
958602250	ISHT41				
958602260	ISHT44				
958602290	ISI41S				
958602330	ISI42S				
958602360	ISI44S				
958602400	ISI45S				
958602450	ISI67S				
958602490	ISI68S				
958602520	ISI70S				
958602550	ISI71S				
958602560	ISM03			95B064230	IS-18-A0-03
958601490	ISM03D	95B063850	IS-18-E0-03	95B063851	IS-18-G0-03
958601510	ISM04			95B064240	IS-18-B0-03
958602600	ISM04D			95B064250	IS-18-H0-03
M12 CONNECTOR					
958601260	IS04K			95B064380	IS-18-A20-S2
958601590	IS09K			95B064390	IS-18-C20-S2
958601620	IS102DK				
958601630	IS102K				
958601660	IS103DK				
958601670	IS103K				
958601700	IS108DK				
958601710	IS108K				
958601740	IS109DK				
958601750	IS109K				
958601760	IS13DK			95B064330	IS-18-G9-S2
958601770	IS13K	95B063940	IS-18-A9-S2	95B063941	IS-18-A9-S2
958601780	IS19DK			95B064350	IS-18-H9-S2
958601790	IS19K			95B064340	IS-18-B9-S2
958601800	IS41DK	95B063490	IS-18-G3-S2	95B063491	IS-18-G3-S2
958601810	IS41K	95B061310	IS-18-A3-S2	95B061311	IS-18-A3-S2
958601820	IS41SK	95B062110	IS-18-B3-S2	95B062111	IS-18-B3-S2
958601860	IS42DK	95B063510	IS-18-G4-S2	95B063511	IS-18-G4-S2
958601870	IS42K	95B061330	IS-18-A4-S2	95B061331	IS-18-A4-S2
958601880	IS42SK	95B062130	IS-18-B4-S2	95B062131	IS-18-B4-S2
958601340	IS43DK	95B062710	IS-18-G6-S2	95B062711	IS-18-G6-S2
958601050	IS44DK	95B063530	IS-18-G1-S2	95B063531	IS-18-G1-S2
958601060	IS44K	95B061350	IS-18-A1-S2	95B061351	IS-18-A1-S2
958601070	IS44SK	95B062150	IS-18-B1-S2	95B062151	IS-18-B1-S2
958601930	IS45DK	95B063550	IS-18-G2-S2	95B063551	IS-18-G2-S2
958601370	IS45K	95B061370	IS-18-A2-S2	95B061371	IS-18-A2-S2
958601380	IS45SK	95B062170	IS-18-B2-S2	95B062171	IS-18-B2-S2
958601090	IS46DK	95B062730	IS-18-G5-S2	95B062731	IS-18-G5-S2
958601970	IS67DK	95B063570	IS-18-H3-S2	95B063571	IS-18-H3-S2
958601980	IS67K	95B061710	IS-18-C3-S2	95B061711	IS-18-C3-S2
958601990	IS67SK	95B062510	IS-18-D3-S2	95B062511	IS-18-D3-S2
958602030	IS68DK	95B063590	IS-18-H4-S2	95B063591	IS-18-H4-S2
958602040	IS68K	95B061730	IS-18-C4-S2	95B061731	IS-18-C4-S2
958602050	IS68SK	95B062530	IS-18-D4-S2	95B062531	IS-18-D4-S2
958602070	IS69DK	95B062790	IS-18-H6-S2	95B062791	IS-18-H6-S2

PROXIMITY INDUCTIVE CROSS-REFERENCE TABLE

INFRA		DLA OLD		DLA NEW	
CODE	MODEL	CODE	MODEL	CODE	MODEL
958601140	IS70DK	95B063610	IS-18-H1-S2	95B063611	IS-18-H1-S2
958601150	IS70K	95B061750	IS-18-C1-S2	95B061751	IS-18-C1-S2
958601160	IS70SK	95B062550	IS-18-D1-S2	95B062551	IS-18-D1-S2
958602110	IS71DK	95B063630	IS-18-H2-S2	95B063631	IS-18-H2-S2
958601420	IS71K	95B061770	IS-18-C2-S2	95B061771	IS-18-C2-S2
958602120	IS71SK	95B062570	IS-18-D2-S2	95B062571	IS-18-D2-S2
958601170	IS72DK	95B062810	IS-18-H5-S2	95B062811	IS-18-H5-S2
958602140	IS81DK				
958602150	IS81K	95B062870	IS-18-A7-S2	95B060780	IS-18-A15-S2
958602180	IS82DK				
958602190	IS82K	95B062890	IS-18-A8-S2		
958602200	IS87DK				
958601460	IS87K	95B062990	IS-18-C7-S2	95B060780	IS-18-A15-S2
958602230	IS88DK				
958602240	IS88K	95B063010	IS-18-C8-S2		
958602270	ISI41SK			95B060340	IS-18-M3-S2
958602310	ISI42SK			95B060350	IS-18-M4-S2
958601480	ISI44SK			95B060320	IS-18-M1-S2
958602380	ISI45SK			95B060330	IS-18-M2-S2
958602430	ISI67SK			95B060380	IS-18-N3-S2
958602470	ISI68SK			95B060390	IS-18-N4-S2
958602510	ISI70SK			95B060360	IS-18-N1-S2
958602540	ISI71SK			95B060370	IS-18-N2-S2
958601210	ISM03DK			95B064270	IS-18-G0-S2
958601220	ISM03K			95B064260	IS-18-A0-S2
958601520	ISM04DK			95B064290	IS-18-H0-S2
958601530	ISM04K			95B064280	IS-18-B0-S2
958602650	ISMF44K			95B065350	IS-18-I1-S2
958602660	ISMF70K	95B063880	IS-18-L1-S2	95B063881	IS-18-L1-S2
958602670	ISWI44K			95B065380	IS-F18-S1-S2
958602680	ISWI70K			95B065390	IS-F18-T1-S2
INDUCTIVE Ø 30mm					
2MT CABLE					
958701080	IS05				
958701090	IS10				
958701280	IS104				
958701290	IS104D	95B063910	IS-30-E7-03		
958701320	IS105				
958701330	IS105D				
958701370	IS110				
958701380	IS110D				
958701410	IS111				
958701420	IS111D				
958701450	IS15			95B064530	IS-30-A9-03
958701460	IS15D			95B064540	IS-30-G9-03
958701480	IS21			95B064550	IS-30-B9-03
958701490	IS21D			95B064560	IS-30-H9-03
958701110	IS47	95B061380	IS-30-A3-03	95B061381	IS-30-A3-03
958701520	IS47D	95B063640	IS-30-G3-03	95B063641	IS-30-G3-03
958701550	IS47S	95B062180	IS-30-B3-03	95B062181	IS-30-B3-03
958701560	IS48	95B061400	IS-30-A4-03	95B061401	IS-30-A4-03
958701570	IS48D	95B063660	IS-30-G4-03	95B063661	IS-30-G4-03
958701610	IS48S	95B062200	IS-30-B4-03	95B062201	IS-30-B4-03
958701620	IS49D			95B064400	IS-30-G6-03
958701000	IS50	95B061420	IS-30-A1-03	95B061421	IS-30-A1-03
958701640	IS50D	95B063680	IS-30-G1-03	95B063681	IS-30-G1-03

PROXIMITY INDUCTIVE CROSS-REFERENCE TABLE

INFRA		DLA OLD		DLA NEW	
CODE	MODEL	CODE	MODEL	CODE	MODEL
958701670	IS50S	95B062220	IS-30-B1-03	95B062221	IS-30-B1-03
958701680	IS51	95B061440	IS-30-A2-03	95B061441	IS-30-A2-03
958701690	IS51D	95B063700	IS-30-G2-03	95B063701	IS-30-G2-03
958701740	IS51S	95B062240	IS-30-B2-03	95B062241	IS-30-B2-03
958701130	IS52D	95B063820	IS-30-G5-03	95B063821	IS-30-G5-03
958701140	IS73	95B061780	IS-30-C3-03	95B061781	IS-30-C3-03
958701750	IS73D	95B063720	IS-30-H3-03	95B063721	IS-30-H3-03
958701780	IS73S	95B062580	IS-30-D3-03	95B062581	IS-30-D3-03
958701790	IS74	95B061800	IS-30-C4-03	95B061801	IS-30-C4-03
958701800	IS74D	95B063740	IS-30-H4-03	95B063741	IS-30-H4-03
958701850	IS74S	95B062600	IS-30-D4-03	95B062601	IS-30-D4-03
958701860	IS75D			95B064410	IS-30-H6-03
958701030	IS76	95B061820	IS-30-C1-03	95B061821	IS-30-C1-03
958701880	IS76D	95B063760	IS-30-H1-03	95B063761	IS-30-H1-03
958701910	IS76S	95B062620	IS-30-D1-03	95B062621	IS-30-D1-03
958701920	IS77	95B061840	IS-30-C2-03	95B061841	IS-30-C2-03
958701930	IS77D	95B063780	IS-30-H2-03	95B063781	IS-30-H2-03
958701970	IS77S	95B062640	IS-30-D2-03	95B062641	IS-30-D2-03
958701980	IS78D			95B064420	IS-30-H5-03
958701040	IS83	95B062900	IS-30-A7-03	95B060810	IS-30-A15-03
958701190	IS83D				
958701200	IS84	95B062920	IS-30-A8-03		
958702020	IS84D				
958701050	IS89	95B063020	IS-30-C7-03	95B060810	IS-30-A15-03
958701210	IS89D				
958701220	IS90	95B063040	IS-30-C8-03		
958702080	IS90D				
958702140	ISI47S				
958702180	ISI48S				
958702220	ISI50S				
958702260	ISI51S				
958702300	ISI73S				
958702340	ISI74S				
958702370	ISI76S				
958702410	ISI77S				
958701060	ISM05			95B064460	IS-30-A0-03
958701240	ISM05D	95B063860	IS-30-E0-03	95B063861	IS-30-G0-03
958701070	ISM06			95B064470	IS-30-B0-03
958702490	ISM06D			95B064480	IS-30-H0-03
M12 CONNECTOR					
958701270	IS05K				
958701300	IS104DK				
958701310	IS104K				
958701340	IS105DK				
958701350	IS105K				
958701360	IS10K				
958701390	IS110DK				
958701400	IS110K				
958701430	IS111DK				
958701440	IS111K				
958701100	IS15DK			95B064580	IS-30-G9-S2
958701470	IS15K			95B064570	IS-30-A9-S2
958701500	IS21DK			95B064600	IS-30-H9-S2
958701510	IS21K			95B064590	IS-30-B9-S2
958701530	IS47DK	95B063650	IS-30-G3-S2	95B063651	IS-30-G3-S2
958701120	IS47K	95B061390	IS-30-A3-S2	95B061391	IS-30-A3-S2

PROXIMITY INDUCTIVE CROSS-REFERENCE TABLE

INFRA		DLA OLD		DLA NEW	
CODE	MODEL	CODE	MODEL	CODE	MODEL
958701540	IS47SK	95B062190	IS-30-B3-S2	95B062191	IS-30-B3-S2
958701580	IS48DK	95B063670	IS-30-G4-S2	95B063671	IS-30-G4-S2
958701590	IS48K	95B061410	IS-30-B3-S2	95B061411	IS-30-A4-S2
958701600	IS48SK	95B062210	IS-30-B4-S2	95B062211	IS-30-B4-S2
958701630	IS49DK			95B064430	IS-30-G6-S2
958701650	IS50DK	95B063690	IS-30-G1-S2	95B063691	IS-30-G1-S2
958701010	IS50K	95B061430	IS-30-A1-S2	95B061431	IS-30-A1-S2
958701660	IS50SK	95B062230	IS-30-B1-S2	95B062231	IS-30-B1-S2
958701700	IS51DK	95B063710	IS-30-G2-S2	95B063711	IS-30-G2-S2
958701710	IS51K	95B061450	IS-30-A2-S2	95B061451	IS-30-A2-S2
958701720	IS51SK	95B062250	IS-30-B2-S2	95B062251	IS-30-B2-S2
958701020	IS52DK	95B063830	IS-30-G5-S2	95B063831	IS-30-G5-S2
958701760	IS73DK	95B063730	IS-30-H3-S2	95B063731	IS-30-H3-S2
958701150	IS73K	95B061790	IS-30-C3-S2	95B061791	IS-30-C3-S2
958701770	IS73SK	95B062590	IS-30-D3-S2	95B062591	IS-30-D3-S2
958701810	IS74DK	95B063750	IS-30-H4-S2	95B063751	IS-30-H4-S2
958701820	IS74K	95B061810	IS-30-C4-S2	95B061811	IS-30-C4-S2
958701830	IS74SK	95B062610	IS-30-D4-S2	95B062611	IS-30-D4-S2
958701870	IS75DK	95B064010	IS-30-H6-S2	95B064440	IS-30-H6-S2
958701890	IS76DK	95B063770	IS-30-H1-S2	95B063771	IS-30-H1-S2
958701160	IS76K	95B061830	IS-30-C1-S2	95B061831	IS-30-C1-S2
958701170	IS76SK	95B062630	IS-30-D1-S2	95B062631	IS-30-D1-S2
958701940	IS77DK	95B063790	IS-30-H2-S2	95B063791	IS-30-H2-S2
958701950	IS77K	95B061850	IS-30-C2-S2	95B061851	IS-30-C2-S2
958701960	IS77SK	95B062650	IS-30-D2-S2	95B062651	IS-30-D2-S2
958701180	IS78DK			95B064450	IS-30-H5-S2
958701990	IS83DK				
958702000	IS83K	95B062910	IS-30-A7-S2	95B060820	IS-30-A15-S2
958702030	IS84DK				
958702040	IS84K	95B062930	IS-30-A8-S2		
958702050	IS89DK				
958702070	IS89K	95B063030	IS-30-C7-S2	95B060820	IS-30-A15-S2
958702090	IS90DK				
958702110	IS90K	95B063050	IS-30-C8-S2		
958702120	ISI47SK			95B060420	IS-30-M3-S2
958702160	ISI48SK			95B060430	IS-30-M4-S2
958702200	ISI50SK			95B060400	IS-30-M1-S2
958702240	ISI51SK			95B060410	IS-30-M2-S2
958702280	ISI73SK			95B060460	IS-30-N3-S2
958702320	ISI74SK			95B060470	IS-30-N4-S2
958701230	ISI76SK			95B060440	IS-30-N1-S2
958702390	ISI77SK			95B060450	IS-30-N2-S2
958701250	ISM05DK			95B064500	IS-30-G0-S2
958702470	ISM05K			95B064490	IS-30-A0-S2
958702510	ISM06DK			95B064520	IS-30-H0-S2
958701260	ISM06K			95B064510	IS-30-B0-S2
INDUCTIVE SQUARE 8x8 mm					
2MT CABLE					
958801170	ISQ01				
958801190	ISQ02				
958801210	ISQ04				
958801220	ISQ05				
958801240	ISQ07				
958801260	ISQ08				
958801120	ISQ10				
958801290	ISQ11				

PROXIMITY INDUCTIVE CROSS-REFERENCE TABLE

INFRA		DLA OLD		DLA NEW	
CODE	MODEL	CODE	MODEL	CODE	MODEL
M8 CONNECTOR					
958801180	ISQ01K1				
958801200	ISQ02K1				
958801110	ISQ04K1				
958801230	ISQ05K1	95B063920	IS-88-Q2-S1		
958801250	ISQ07K1				
958801270	ISQ08K1				
958801280	ISQ10K1				
958801300	ISQ11K1				
INDUCTIVE RECTANGULAR 16,5x30x10 mm					
2MT CABLE					
958801020	XSP4003			95B065230	IS-40-W6-03
958801030	XSP4006			95B065240	IS-40-W5-03
958801050	XSP4013			95B065250	IS-40-W7-03
958801060	XSP4014			95B065260	IS-40-W8-03
958801320	XSP4017			95B065270	IS-40-Y6-03
958801070	XSP4020			95B065280	IS-40-Y5-03
958801080	XSP4027			95B065290	IS-40-Y7-03
958801330	XSP4028			95B065300	IS-40-Y8-03
M8 CONNECTOR					
958801310	XSP4003SK			95B065310	IS-40-X6-S2
958801040	XSP4006SK			95B065320	IS-40-X5-S2
958805010	IS-40-C11-S3			95B065330	IS-40-C11-S3

EUROPE

DATALOGIC AUTOMATION
Headquarters
Via Lavino, 265
40050 Monte San Pietro
Bologna - Italy
Tel. +39 (0)51/6765611
Fax +39 (0)51/6759324
info.automation.it@datalogic.com

DATALOGIC AUTOMATION Iberia
Sucursal en España
C/ Samonta,25 4ª Planta
08970 Sant Joan Despí
Barcelona - Spain
Tel. +34 (0)93/4772059
Fax +34 (0)93/4777272
info.automation.es@datalogic.com

DATALOGIC AUTOMATION S.r.l.
Italien Filial
Höjdrodergatan 21
21239 Malmö - Sweden
Tel. +46 (0)40/385000
Fax +46 (0)40/385001
info.automation.se@datalogic.com

DATALOGIC AUTOMATION Benelux
Coltbaan 25
3439 NG Nieuwegein - The Netherlands
Tel. +31 (0)30/6023410
Fax +31 (0)30/6022064
info.automation.nl@datalogic.com

DATALOGIC AUTOMATION S.r.l.
Niederlassung Central Europe
Carl-Zeiss Str. 31
73230 Kirchheim/Teck
Germany
Tel. +49 07021/509700
Fax +49 07021/5097029
info.automation.de@datalogic.com

DATALOGIC AUTOMATION UK
Datalogic House
Dunstable Road, Redbourn
Herfordshire
England
AL3 7PR
Tel. +44 (0)1582/464900
Fax +44 (0)1582/464999
info.automation.uk@datalogic.com

DATALOGIC AUTOMATION S.r.l.
Succursale en France
Le Parc Technologique de Lyon
333 cours du 3ème Millénaire - Le Pôle
69800 Saint Priest - France
Tél. +33 (0)4/72476180
Fax +33 (0)4/72470721
info.automation.fr@datalogic.com

AMERICA

DATALOGIC AUTOMATION Inc
3000 Earhart Court, Suite 135
Hebron, Kentucky 41048 - United States
Tel. +1 (0)859/6897000
Fax +1 (0)859/3344970
info.automation.us@datalogic.com

ASIA

DATALOGIC AUTOMATION Asia Ltd
Suite 902,Suncome Liauw's Plaza,
738 Shang Cheng Road, Pudong,
Shanghai 200120 - China
Tel: +86 (0)21/58366692/3
Fax: +86 (0)21/58366695
info.automation.cn@datalogic.com

DATALOGIC AUTOMATION Asia Ltd
Unit 1-3, 7/F, Yuen Long Trading Centre,
33 Wang Yip Street West, Yuen Long, NT.
Hong Kong
Tel +852 2785/3912
Fax +852 2785/3913
info.automation.hk@datalogic.com

IDEC DATALOGIC.CO. Ltd
10-40, Mikuni-Honmachi 1-Chome,
Yodogawa-ku, Osaka 532 0005, Japan
Tel. +81(6) 6398/3200
Fax +81 (6) 6398/3202
www.idljp.com

AUSTRALIA - NEW ZEALAND

DATALOGIC AUTOMATION Pty Ltd
Unit 130, 45 Gilby Road
Mt Waverley
Victoria, 3149 - Australia
Tel. +61 (0)3/95589299
Fax: +61 (0)3/95589233
info.automation.au@datalogic.com

www.automation.datalogic.com

Product and Company names and logos referenced may be either trademarks or registered trademarks of their respective companies. We reserve the right to make modifications and improvements.

DATALOGIC™

DATALOGIC AUTOMATION